DESIGN &ANALYSIS OF MICRO INVERTER FOR PV PLANTS

Ms.Shaik Neelafar
Lecturer
Department Of EEE
NAWAB SHAH ALAM KHAN COLLEGE OF ENGINNERING & TECHNOLOGY
NEW MALAKPET , HYDERABAD-500 024

Abstract:

Renewable energy sources are obviously accepted as clean energy sources of future. The solar energy is the most popular among other renewable energy sources in all over the world. Many studies are performed on photovoltaic (PVs) and solar energy systems. Inverter is the most important power converter section of photovoltaic systems in terms of efficiency in changing weather conditions. This study presents the design and analysis of a micro inverter for PV systems. The proposed micro inverter is designed by using MATLAB Simulink software, and the control algorithms are implemented according to Incremental Conductance method. It consists of isolated boost converter with Maximum Power Point Tracking (MPPT) and H-bridge inverter with PI controller. The reaction of system has been observed under changing irradiation conditions. The implemented micro inverter has compensated the irradiation changes at boost converter stage, and dc-ac conversion process is performed regarding to the designed PI controller. The dc bus voltage is increased to around 300V, and the HF transformer is used to increase inverter input voltage to 420V. The output of inverter is generated with the support of PI controller to track 220Vrms line voltage. The THD rates for both voltage and current are measured at 0.51% in FFT spectrum, and the overall power of the micro inverter is supplied around 315W.

INTRODUCTION

The energy resources can be mainly classified into three categories as nuclear resources, fossil fuels and renewable resources. The renewable energy resources, which is one of the most widely

Researched among others [1]. There are a lot of renewable energy sources (RES) in the world such as hydropower, marine energies, biomass, geothermal, solar and wind where the 14% of thetotal world energy requirement is provided by means of RES [2]. Renewable energy (RE) studies are increasing with each passing day due to fossil fuels depletion and greenhouse effects. Solar photovoltaic (PV) systems are becoming significant RES because of its clean structure, nonfuel requirement, sustainability and reliability [3].Electricity is generated from sunlight by converting solar light into electricity by solar cells. The solar cells can be classified as first, second and third generation cells. The first generation cells are made of polycrystalline and monocrystallinesilicon materials while the second-generation cells are thin solar cells. The third generation of solar cells consists of a number of thin-film technologies. One of them is monocrystalline cells, which is better thanothers in terms of efficiency. However,monocrystalline cells are more expensive thanothers [4]. The PV system can be sectionalized as

Standalone system and grid tied system where the battery bank is required to store PV energy for

Standalone system. Since the grid-tie systems are directly connected to the grid, any battery bank is not involved for them [5]. A regular PV system consists of PV panels, inverter and auxiliary electronic circuits. The inverters are prevalently classified as string inverter, central inverter and the micro inverter. The central inverter shown in Fig.1.a. Has its own Maximum Power Point Tracking (MPPT) algorithm that is used in large PV solar plants. The large PV solar plants consist of strings which are comprised of series and parallel connected PV panels. Each string of PV panels is connected to central inverter. High voltage DC cabling is required for connecting central inverter that causes some disadvantages such as cable losses in the system. Furthermore, the system can be completely disabled in partial shading condition fop system [5]. Another type of the inverter is the string inverter that connects one PV string as seen in Fig. 1.b. This structure has not diode loss in series and provides separate MPPT control for each string.

On the other hand, this is not sufficient to accomplish shading problems in the PV system [6].

Therefore, a new type of inverter challenging with partial shading is implemented and called micro inverter. Many micro inverters are connected teach PV panel, and then they are connected to antic bus bar to improve output power of system, as shown in Fig. 1.c. The MPPT control is implemented for each PV panel in a PV system with micro

inverter. Hence, partial shading situations are successfully eliminated [6]. The micro inverters are widely seen in single-phase systems since 2010, and it is widespread in terms of researches. The output power of micro inverters are around 100W to 350Wcorresponding to PV panels. Each micro inverter is connected to any PV panel and thus the troubles, dust, and micro inverters eliminate shading problems seen in central systems. Although the advantages of micro inverters, they also bring some disadvantages such as increasing the cost of overall system.

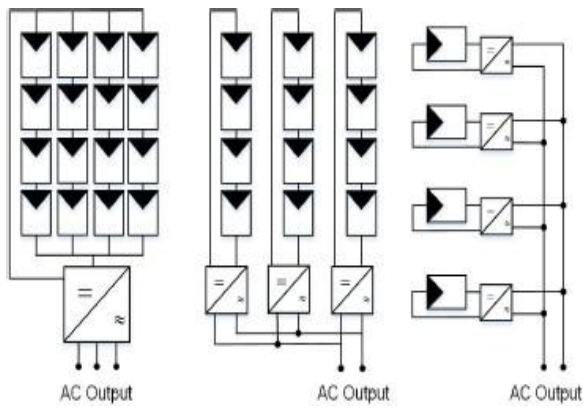

Figure 1. Structures of PV inverter (a) Central inverter (b)

String inverter (c) Micro inverter

In this paper, the PV system with micro inverters modelled through MATLAB Simulink software. The micro inverter is designed to observe system reaction when solar irradiance changes. There are two closed loop control algorithms are implemented in the presented study. The Incremental Conductance MPPT algorithm controls the dc-converter section of micro inverter where it tracks the irradiance change rapidly. On the other hand, single-phase H-bridge inverter performs the dc-conversion process where the control is performed by PI assisted modulation algorithm. The inverter is operated at island mode without any connection to

The mains. However, the inverter output voltage is adjusted to 220Vrms at 50 Hz line voltage, which is proper to operate with grid connection.

PHOTOVOLTAIC TECHNOLOGY

Photovoltaic is the field of technology and research related to the devices which directly convert sunlight into electricity using semiconductors that exhibit the photovoltaic effect. Photovoltaic effect involves the creation of voltage in a material upon exposure to electromagnetic radiation.

The photovoltaic effect was first noted by a French physicist, Edmund Becquerel, in 1839, who found that certain materials would produce small amounts of electric current when exposed to light. In 1905, Albert Einstein described the nature of light and the photoelectric effect on which photovoltaic technology is based, for which he later won a Nobel Prize in physics. The first photovoltaic module was built by Bell Laboratories in 1954. It was billed as a solar battery and was mostly just a curiosity as it was too expensive to gain widespread use. In the 1960s, the space industry began to make the first serious use of the technology to provide power aboard spacecraft. Through the space programs, the technology advanced, its reliability was established, and the cost began to decline. During the energy crisis in the 1970s, photovoltaic technology gained recognition as a source of power for non-space applications.

The solar cell is the elementary building block of the photovoltaic technology. Solar cells are made of semiconductor materials, such as silicon. One of the properties of semiconductors that makes them most useful is that their conductivity may easily be modified by introducing impurities into their crystal lattice. For

instance, in the fabrication of a photovoltaic solar cell, silicon, which has four valence electrons, is treated to increase its conductivity. On one side of the cell, the impurities, which are phosphorus atoms with five valence electrons (n-donor), donate weakly bound valence electrons to the silicon material, creating excess negative charge carriers.

On the other side, atoms of boron with three valence electrons (p-donor) create a greater affinity than silicon to attract electrons. Because the p-type silicon is in intimate contact with the n-type silicon a p-n junction is established and a diffusion of electrons occurs from the region of high electron concentration (the n-type side) into the region of low electron concentration (p-type side). When the electrons diffuse across the p-n junction, they recombine with holes on the p-type side. However, the diffusion of carriers does not occur indefinitely, because the imbalance of charge immediately on either sides of the junction originates an electric field. This electric field forms a diode that promotes current to flow in only one direction.

Osmic metal-semiconductor contacts are made to both the n-type and p-type sides of the solar cell, and the electrodes are ready to be connected to an external load. When photons of light fall on the cell, they transfer their energy to the charge carriers. The electric field across the junction separates photo-generated positive charge carriers (holes) from their negative counterpart (electrons). In this way an electrical current is extracted once the circuit is closed on an external load.

2.1 Solar cell:

The photovoltaic effect was first reported by Edmund Becquerel in 1839when he observed that the action of light on a silver coated platinum electrode immersed in electrolyte produced an electric current. Forty years later the first solid state photovoltaic devices were constructed by workers investigating the recently discovered photoconductivity of selenium. In1876 William Adams and Richard Day found that a photocurrent could be produced in a sample of selenium when contacted by two heated platinum contacts. The photovoltaic action of the selenium differed from its photoconductive action in that a current was produced spontaneously by the action of light.

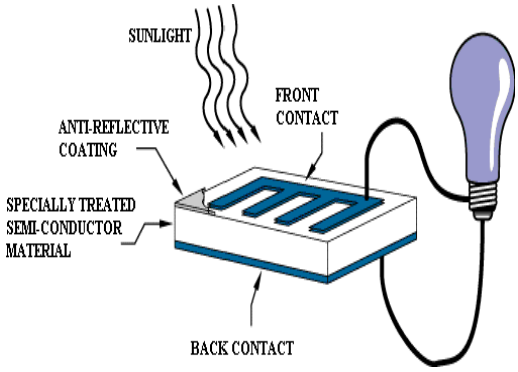

Fig 2.1: Solar cell.

No external power supply was needed. In this early photovoltaic device, a rectifying junction had been formed between the semiconductor and the metal contact. In 1894, Charles Frits prepared what was probably the first large area solar cell by pressing a layer of selenium between gold and another metal.

In the following years photovoltaic effects were observed in copper {copper oxide thin _lm structures, in lead supplied and thallium supplied. These early cells were thin film Scotty barrier devices, where a semi-transparent layer of metal deposited on top of the semiconductor provided both the asymmetric electronic junction, which is necessary for photovoltaic action and access to the junction for the incident light. The photovoltaic effect of structures like this was related to the existence of a barrier to current flow at one of the semiconductor {metal interfaces (i.e., rectifying action) by Goldman and Brodsky in 1914. Later, during the 1930s, the theory of metal {semiconductor barrier layers was developed by Walter Scotty, Neville Mott and others.

However, it was not the photovoltaic properties of materials like selenium which excited researchers, but the photoconductivity. The fact that the current produced was proportional to the intensity of the incident light, and related to the wavelength in a definite way meant that photoconductive materials were ideal for photographic light meters. The photovoltaic effecting barrier structures was an added benefit, meaning that the light meter could operate without a power supply. It was not until the 1950s, with the development of good quality silicon wafers for applications in the new solid-state electronics, that potentially useful quantities of power were produced by photovoltaic devices in crystalline silicon.

In the 1950s, the development of silicon electronics followed the discovery of a way to manufacture p-n junctions in silicon. Naturally n type silicon wafers developed a p type skin when exposed to the gas boron trichloride.Part of the skin could be etched away to give access to the n type layer beneath. These p {n junction structures produced much better rectifying action than Schottky barriers, and better photovoltaic behaviour. The first silicon solar cell was reported by Chapin, Fuller and Pearson in 1954 and converted sunlight with an efficiency of 6%, six times higher than the best previous attempt. That figure was to rise significantly over the following years and decades but, at an estimated production cost of some $200 per Watt, these cells were not seriously considered for power generation for several decades. Nevertheless, the early silicon solar cell did introduce the possibility of power generation in remote locations where fuel could not easily be delivered. The obvious application was to satellites where the requirement of reliability and low weight made the cost of the cells unimportant and during the 1950s and 60s, silicon solar cells were widely developed for applications in space.

Also in 1954, a cadmium supplied p-n junction was produced with an efficiency of 6%, and in the following years studies of p-n junction photovoltaic devices in gallium arsenide, indium phosphate and cadmium telluride were stimulated by theoretical work indicating that these materials would offer a higher efficiency. However, silicon remained and remains the foremost photovoltaic material, benefiting from the advances of silicon technology for the microelectronics industry. Short histories of the solar cell are given elsewhere.

In the 1970s the crisis in energy supply experienced by the oil-dependent western world led to a sudden growth of interest in alternative sources of energy, and funding for research and development in those areas. Photovoltaic was a subject of intense interest during this period, and a range of strategies for producing photovoltaic devices and materials more cheaply and for improving device.

Efficiency was explored. Routes to lower cost included photo electrochemical junctions, and alternative materials such as polycrystalline silicon, amorphous silicon, other `thin _lm' materials and organic conductors. Strategies for higher efficiency included tandem and other multiple band gap designs. Although none of these led to widespread commercial development, our understanding of the science of photovoltaic is mainly rooted in this period.

During the 1990s, interest in photovoltaic expanded, along with growing awareness of the need to secure sources of electricity alternative to fossil fuels. The trend coincides with the widespread deregulation of the electricity markets and growing recognition of the viability of decentralized power. During this period, the economics of photovoltaic improved primarily through economies of scale. In the late 1990s the photovoltaic production expanded at a rate of 15{25% per annum, driving a reduction in cost. Photovoltaic first became competitive in contexts where conventional electricity supply is most expensive, for instance, for remote low power applications such as navigation, telecommunications, and rural electrification and for enhancement of supply in grid-connected loads at peak use [Anderson, 2001]. As prices fall, new markets are opened up. An important example is building integrated photovoltaic applications, where the cost of the photovoltaic system is offset by the savings in building materials. There are several types of solar cells. However, more than 90 % of the solar cells currently made worldwide consist of wafer-based silicon cells.

They are either cut from a single crystal rod or from a block composed of many crystals and are correspondingly called mono-crystalline or multi-crystalline silicon solar cells. Wafer-based silicon solar cells are approximately 200 am thick. Another important family of solar cells is based on thin-films, which are approximately 1-2 am thick and therefore require significantly less active, semiconducting material. Thin-film solar cells can be

manufactured at lower cost in large production quantities; hence their market share will likely increase in the future. However, they indicate lower efficiencies than wafer-based silicon solar cells, which mean that more exposure surface and material for the installation is required for a similar performance.

A number of solar cells electrically connected to each other and mounted in a single support structure or frame is called a 'photovoltaic module'. Modules are designed to supply electricity at a certain voltage, such as a common 12 volt system. The current produced is directly dependent on the intensity of light reaching the module. Several modules can be wired together to form an array. Photovoltaic modules and arrays produce direct-current electricity. They can be connected in both series and parallel electrical arrangements to produce any required voltage and current combination.

2.2 Electrical connection of the cells:

The electrical output of a single cell is dependent on the design of the device and the

Semi-conductor material(s) chosen, but is usually insufficient for most applications. In order to provide the appropriate quantity of electrical power, a number of cells must be electrically connected. There are two basic connection methods: series connection, in which the top contact of each cell is connected to the back contact of the next cell in the sequence, and parallel connection, in which all the top contacts are connected together, as are all the bottom contacts. In both cases, this results in just two electrical connection points for the group of cells.

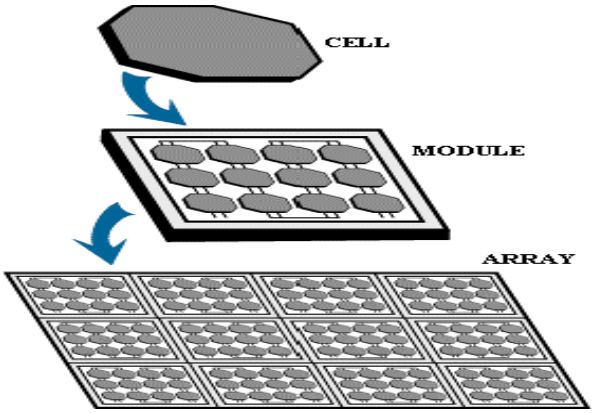

Fig 2.2.1: cell, module and array

- **Series connection:**

Figure shows the series connection of three individual cells as an example and the resultant group of connected cells is commonly referred to as a series string.

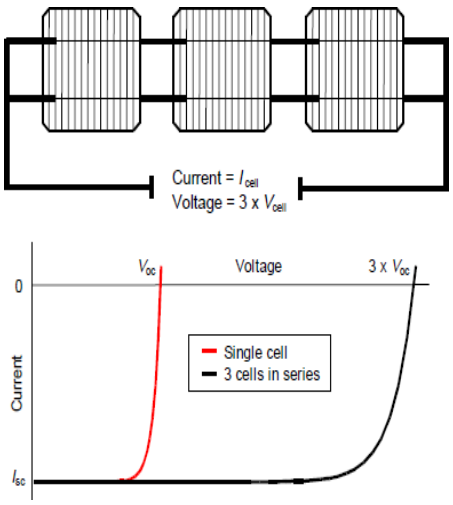

Fig. 2.2.2: Series connection of cells, with resulting current–voltage characteristic

The current output of the string is equivalent to the current of a single cell, but the voltage output is increased, being an addition of the voltages from all the cells in the string (i.e. in this case, the voltage output is equal to 3Vcell).It is important to have well matched cells in the series string, particularly with respect to current. If one cell produces a significantly lower current than the other cells (under the same illumination conditions), then the string will operate at that lower current level and the remaining cells will not be operating at their maximum power points.

- **Parallel connection:**

Figure shows the parallel connection of three individual cells as an example. In this case, the current from the cell group is equivalent to the addition of the current from each cell (in this case, 3 I cell), but the voltage remains equivalent to that of a single cell.

As before, it is important to have the cells well matched in order to gain maximum output, but this time the voltage is the important parameter since all cells must be at the same operating voltage. If the voltage at the maximum power point is substantially different for one of the cells, then this will force all the cells to operate off their maximum power point, with the poorer cell being pushed towards its open-circuit voltage value and the better cells to voltages below the maximum power point voltage. In all cases, the power level will be reduced below the optimum.

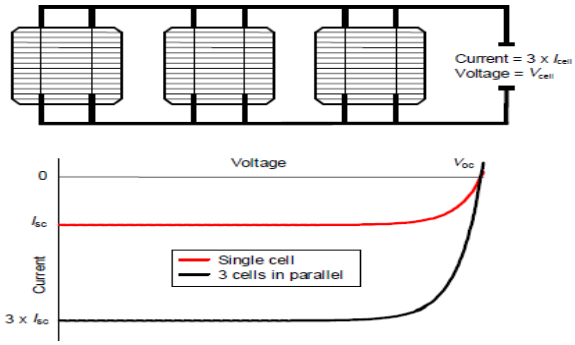

Fig.2.2.3: Parallel connection of cells, with resulting current–voltage characteristic

2.3 The photovoltaic array:

A PV array consists of a number of PV modules, mounted in the same plane and electrically connected to give the required electrical output for the application. The PV array can be of any size from a few hundred watts to hundreds of kilowatts, although the larger systems are often divided into several electrically independent sub arrays each feeding into their own power conditioning system.

2.4 The photovoltaic system:

A PV system consists of a number of interconnected components designed to accomplish a desired task, which may be to feed electricity into the main distribution grid, to pump water from a well, to power a small calculator or one of many more possible uses of solar-generated electricity. The design of the system depends on the task it must perform and the location and other site conditions under which it must operate. This section will consider the components of a PV system, variations in design according to the purpose of the system, system sizing and aspects of system operation and maintenance.

2.4.1 System design:

There are two main system configurations – stand-alone and grid-connected. As its name implies, the stand-alone PV system operates independently of any other power supply and it usually supplies electricity to a dedicated load or loads. It may include a storage facility (e.g. battery bank) to allow electricity to be provided during the night or at times of poor sunlight levels. Stand-alone systems are also often referred to as autonomous systems since their operation is independent of other power sources. By contrast, the grid-connected PV system operates in parallel with the conventional electricity distribution system. It can be used to feed electricity into the grid distribution system or to power loads which can also be fed from the grid.

It is also possible to add one or more alternative power supplies (e.g. diesel generator, wind turbine) to the system to meet some of the load requirements. These systems are then known as 'hybrid' systems.

Hybrid systems can be used in both stand-alone and grid-connected applications but are more common in the former because, provided the power supplies have been chosen to be complementary, they allow reduction of the storage requirement without increased loss of load probability. Figures below illustrate the schematic diagrams of the three main system types.

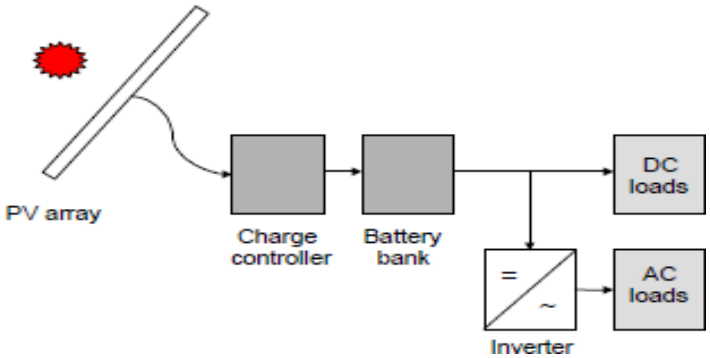

Fig.2.4.1: Schematic diagram of a stand-alone photovoltaic system.

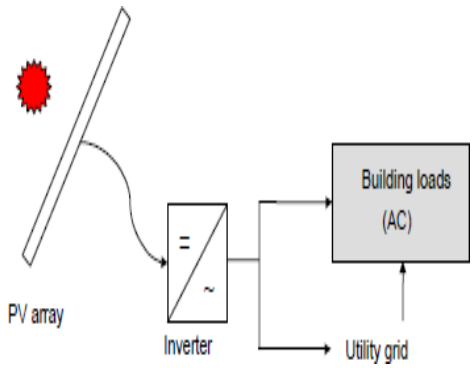

Fig.2.4.2: Schematic diagram of grid-connected photovoltaic system.

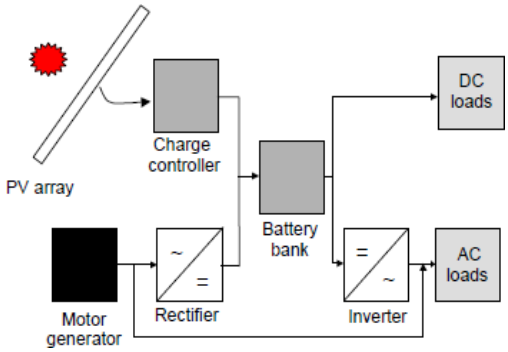

Fig.2.4.3: Schematic diagram of hybrid system incorporating a photovoltaic array and a motor generator(e.g. diesel or wind).

SOLAR MICRO-INVERTER

3.1 Introduction

A solar micro-inverter, or simply micro-inverter, is a plug-and-play device used in photovoltaic's,that converts direct current (DC) generated by a single solar module to alternating current (AC). Micro-inverters contrast with conventional string and central solar inverters, in which a single inverter is connected to multiple solar panels. The output from several micro-inverters can be combined and often fed to the electrical grid.

Micro-inverters have several advantages over conventional inverters. The main advantage is that they electrically isolate the panels from each other, so small amounts of shading, debris or snow lines on any one solar module, or even a complete module failure, does not disproportionately reduce the output of the entire array. Each micro-inverter harvests optimum power by performing maximum power point tracking (MPPT) for its connected

module.[1] Simplicity in system design, lower amperage wires, simplified stock management, and added safety are other factors introduced with the micro-inverter solution.

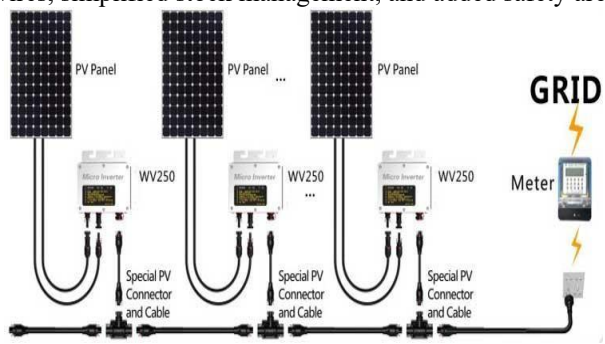

Fig.3.1: Pv panel fed micro-inverter

The primary disadvantages of a micro-inverter include a higher initial equipment cost per peak watt than the equivalent power of a central inverter since each inverter needs to be installed adjacent to a panel (usually on a roof). This also makes them harder to maintain and more costly to remove and replace. Some manufacturers have addressed these issues with panels with built-in micro-inverters. A micro-inverter has often a longer lifespan than a central inverter, which will need replacement during the lifespan of the solar panels. Therefore the financial disadvantage at first may become an advantage on the long term. A type of technology similar to a micro-inverter is a power optimizer which also does panel-level maximum power point tracking, but does not convert to AC per module.

3.2 String inverter

Solar panels produce direct current at a voltage that depends on module design and lighting conditions. Modern modules using 6-inch cells typically contain 60 cells and produce a nominal 24-30 V (so inverters are ready for 24-50 V).For conversion into AC, panels may be connected in series to produce an array that is effectively a single large panel with a nominal rating of 300 to 600 VDC. The power then runs to an inverter, which converts it into standard AC voltage, typically 230 VAC / 50 Hz or 240 VAC / 60 Hz.

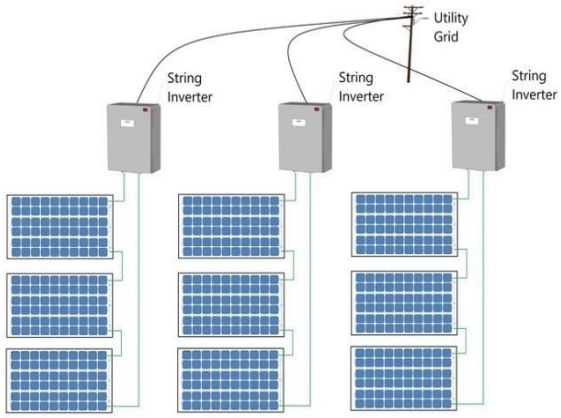

Fig.3.2: String inverter

The main problem with the "string inverter" approach is the string of panel's acts as if it were a single larger panel with a max current rating equivalent to the poorest performer in the string. For example, if one panel in a string has 5% higher resistance due to a minor manufacturing defect, the entire string suffers a 5% performance loss. This situation is dynamic. If a panel is shaded its output drops dramatically, affecting the output of the string, even if the other panels are not shaded. Even slight changes in orientation can cause output loss in this fashion. In the industry, this is known as the "Christmas-lights effect", referring to the way an entire string of series-strung Christmas tree lights will fail if a single bulb fails.[5] However, this effect is not entirely accurate and ignores the

complex interaction between modern string inverter maximum power point tracking and even module bypass diodes. Shade studies by major micro-inverter and DC optimizer companies show small yearly gains in light, medium and heavy shaded conditions- 2%, 5% and 8% respectively- over an older string inverter.

Additionally, the efficiency of a panel's output is strongly affected by the load the inverter places on it. To maximize production, inverters use a technique called maximum power point tracking to ensure optimal energy harvest by adjusting the applied load. However, the same issues that cause output to vary from panel to panel affect the proper load that the MPPT system should apply. If a single panel operates at a different point, a string inverter can only see the overall change, and moves the MPPT point to match. This results in not just losses from the shadowed panel, but the other panels too. Shading of as little as 9% of the surface of an array can, in some circumstances, reduce system-wide power as much as 54%. However, as stated above, these yearly yield losses are relatively small and newer technologies allow some string inverters to significantly reduce the effects of partial shading.

Another issue, though minor, is that string inverters are available in a limited selection of power ratings. This means that a given array normally up-sizes the inverter to the next-largest model over the rating of the panel array. For instance, a 10-panel array of 2300 W might have to use a 2500 or even 3000 W inverter, paying for conversion capability it cannot use. This same issue makes it difficult to change array size over time, adding power when funds are available (modularity). If the customer originally purchased a 2500 W inverter for their 2300 W of panels, they cannot add even a single panel without over-driving the inverter. However, this over sizing is considered common practice in today's industry (sometimes as high as 20% over inverter nameplate rating) to account for module degradation, higher performance during winter months or to achieve higher sell back to the utility.

Other challenges associated with centralized inverters include the space required to locate the device, as well as heat dissipation requirements. Large central inverters are typically actively cooled. Cooling fans make noise, so location of the inverter relative to offices and occupied areas must be considered. And because cooling fans have moving parts, dirt, dust, and moisture can negatively affect their performance over time. String inverters are quieter but might produce a humming noise in late afternoon when inverter power is low.

3.3 Micro-inverter

Micro-inverters are small inverters rated to handle the output of a single panel. Modern grid-tie panels are normally rated between 225 and 275 W, but rarely produce this in practice, so micro-inverters are typically rated between 190 and 220 W (sometimes, 100 W). Because it is operated at this lower power point, many design issues inherent to larger designs simply go away; the need for a large transformer is generally eliminated, large electrolytic capacitors can be replaced by more reliable thin-film capacitors, and cooling loads are reduced so no fans are needed. Mean time between failures (MTBF) is quoted in hundreds of years.

Fig.3.3: Micro-inverter

More importantly, a micro-inverter attached to a single panel allows it to isolate and tune the output of that panel. For example, in the same 10-panel array used as an example above, with micro-inverters any panel that is under-performing has no effect on panels around it. In that case, the array as a whole produces as much as 5% more power than it would with a string inverter. When shadowing is factored in, if present, these gains can become considerable, with manufacturers generally claiming 5% better output at a minimum, and up to 25% better in some cases. Furthermore, a single model can be used with a wide variety of panels, new panels can be added to an array at any time, and do not have to have the same rating as existing panels.

Sometimes, as much as two solar panels are attached to the same micro-inverters (duo micro-inverter). The power that inputs the micro-inverter is then ≥600 W and 24 V (i.e. as said, two 12 V solar panel can be tied together). Micro-inverter then converts power provided by solar panel(s) into standard AC voltage, typically 230 VAC / 50 Hz or 240 VAC / 60 Hz. The typical size of this micro-inverter is: 22x16.4x5.2cm / 8.66x6.46x2.05".

As said, micro-inverters produce grid-matching power directly at the back of the panel (i.e. 220 V). Arrays of panels are connected in parallel to each other, and then to the grid. This has the major advantage that a single failing panel or inverter cannot take the entire string offline. Combined with the lower power and heat loads, and improved MTBF, some suggest that overall array reliability of a micro-inverter-based system is significantly greater than a string inverter-based one. This assertion is supported by longer warranties, typically 15 to 25 years, compared with 5 or 10 year warranties that are more typical for string inverters. Additionally, when faults occur, they are identifiable to a single point, as opposed to an entire string. This not only makes fault isolation easier, but unmasks minor problems that might not otherwise become visible – a single under-performing panel may not affect a long string's output enough to be noticed.

3.4 Disadvantages

The main disadvantage of the micro-inverter concept has, until recently, been cost. Because each micro-inverter has to duplicate much of the complexity of a string inverter but spread that out over a smaller power rating, costs on a per-watt basis are greater. This offsets any advantage in terms of simplification of individual components. As of February 2018, a central inverter costs approximately $0.13 per watt, whereas a micro-inverter costs approximately $0.34 per watt. Like string inverters, economic considerations force manufacturers to limit the number of models they produce. Most produce a single model that may be over or undersize when matched with a specific panel.

In many cases the packaging can have a significant effect on price. With a central inverter you may have only one set of panel connections for dozens of panels, a single AC output, and one box. Micro-inverter installations larger than about 15 panels may require a roof mounted "combiner" breaker box as well. This can add to the overall price-per-watt.

To further reduce costs, some models control two or three panels from an inverter, reducing the packaging and associated costs. Some systems simply place two entire micros in a single box, while others duplicate only the MPPT section of the system and use a single DC-to-AC stage for further cost reductions. Some have suggested that this approach will make micro-inverters comparable in cost with those using string inverters. With steadily decreasing prices, the introduction of dual micro-inverters and the advent of wider model selections to match PV module output more closely, cost is less of an obstacle.

Micro-inverters have become common where array sizes are small and maximizing performance from every panel is a concern. In these cases, the differential in price-per-watt is minimized due to the small number of panels, and has little effect on overall system cost. The improvement in energy harvest given a fixed size array can offset this difference in cost. For this reason, micro-inverters have been most successful in the residential market, where limited space for panels constrains array size and shading from nearby trees or other objects is often an issue. Micro-inverter manufacturers list many installations, some as small as a single panel and the majority under 50.

An often overlooked disadvantage of micro inverters is the future operation and maintenance costs associated with them. While the technology has improved over the years the fact remains that the devices will

eventually either fail or wear out. The installer must balance these replacement costs (around $400 per truck roll), increased safety risks to personnel, equipment and module racking against the profit margins for the installation. For homeowners, the eventual wear out or premature device failures will introduce potential damage to the roof tiles or shingles, property damage and other nuisances.

3.5. Advantages

While micro-inverters generally have a lower efficiency than string inverters, the overall efficiency is increased due to the fact that every inverter / panel unit acts independently. In a string configuration, when a panel on a string is shaded, the output of the entire string of panels is reduced to the output of the lowest producing panel. This is not the case with micro inverters.

A further advantage is found in the panel output quality. The rated output of any two panels in the same production run can vary by as much as 10% or more. This is mitigated with a string configuration but not so in a micro-inverter configuration. The result is maximum power harvesting from a micro-inverter array.

Monitoring and maintenance is also easier as many micro-inverter producers provide apps or websites to monitor the power output of their units. In many cases, these are proprietary; however this is not always the case. Following the demise of Enecsysand the subsequent closure of their site; a number of private sites such as Enecsys-Monitoring [15] sprung up to enable owners to continue to monitor their systems.

3.6. Three-phase micro-inverters

Efficient conversion of DC power to AC requires the inverter to store energy from the panel while the grid's AC voltage is near zero, and then release it again when it rises. This requires considerable amounts of energy storage in a small package. The lowest-cost option for the required amount of storage is the electrolytic capacitor, but these have relatively short lifetimes normally measured in years, and those lifetimes are shorter when operated hot, like on a rooftop solar panel. This has led to considerable development effort on the part of micro-inverter developers, who have introduced a variety of conversion topologies with lowered storage requirements, some using the much less capable but far longer lived thin film capacitors where possible.

Three-phase electric power represents another solution to the problem. In a three-phase circuit, the power does not vary between (say) +120 to -120 V between two lines, but instead varies between 60 and +120 or -60 and -120 V, and the periods of variation are much shorter. Inverters designed to operate on three phase systems require much less storage.[16][17] A three-phase micro using zero-voltage switching can also offer higher circuit density and lower cost components, while improving conversion efficiency to over 98%, better than the typical one-phase peak around 96%.[18]

Three-phase systems, however, are generally only seen in industrial and commercial settings. These markets normally install larger arrays, where price sensitivity is the highest. Uptake of three-phase micros, in spite of any theoretical advantages, appears to be very low.

PROPOSED CONCEPT

4.1 SYSTEM DESCRIPTION

The micro inverter, which is shown in Fig.4.1, consists of two stages where the first stage is composed of transformer isolated boost converter while the second stage includes the H-bridge inverter [6]. The conventional boost converter is composed of inductor L1, switch SB, diode D1, and capacitor, C1 where converter and inverter section

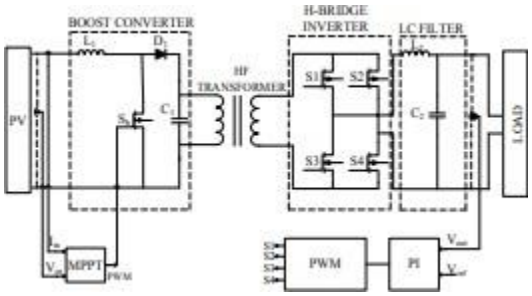

Figure 4.1. The structure of micro inverter

Are isolated by a high frequency transformer. The switching device of the boost converter is a MOSFET. It is controlled by a closed loop that the duty cycle is defined by MPPT controller. Single-phase micro inverters should be isolated at the end of converter stage [7]. For grid isolation HF transformer should be used in the micro inverter system. The H-bridge inverter consisted of four MOSFETs is controlled by PWM with PI controller. The LC filter is placed at the output of inverter in order to reduce harmonics and generate pure sine wave [7]. In this study, the output power of the designed micro inverter is set to 315W, while the input voltage is around 55V-60V DC and output voltage is at 220Vrms AC. The input and output voltage of micro inverter is monitored by the implemented control software. The MPPT algorithm is implemented in dc-dc converter section and PI control algorithm in dc-ac section of the micro inverter. The output voltage of PV panel is increased up to 311 V by boost converter with MPPT. Then it is amplified up to 427 V via HF transformer where the transformation ratio is 1:1.37. The Sinusoidal pulse width modulation (SPWM) is implemented for the H-bridge inverter with PI controller and the output voltage is acquired 220 Vims at 50 Hz. The parameters of the modelled PV panel are presented in Table. I. The output peak power and other parameters are set to regarding to a commercial PV panel [7], and the micro inverter is tested by using this PV module.

Table 1. Parameters of PV Panel

Parameter	Value
Power	315W
Voc, Open circuit voltage	64.6V
Vpm, Maximum power voltage	54.7V
Isc, Short circuit current	6.14A
Ipm, Maximum power current	5.76A

4.2 DESIGN OF MICRO INVERTER

A. Boost Converter The dc-dc converter is quite important in PV system since the generated voltage from PV panel is not adequate to meet the load demand itself. The boost converter is also called step up converter since value of input dc voltage is increased to a higher level [8]. It temporarily stores the input energy and then releases it into the output as a higher voltage level. This storage is performed in inductors or capacitors [9]. The capacitor is used to reduce oscillation at the output voltage waveform. In order to minimize the switching power losses, a switching device is used with switching pulse that is generated by the MPPT controller [10]. Fig. 3 shows circuit diagram of boost converter where the design parameters are given below;

$$V_{out} = \frac{V_{in}}{1-D} \qquad (1)$$

$$C \geq \frac{I_o.D.T_s}{\Delta V_{max}} \quad (2)$$

$$L = \frac{V_{in}.D}{\Delta I.f_s} \quad (3)$$

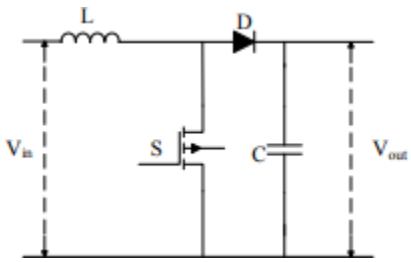

Figure 4.2. Structure of boost converter

The boost converter is operated in two mode that are based on charge and discharge of the reactive components. In the first operation mode, the switching device is turned to the "on" position and the inductor is charged to an energy level. In the next step, the switch is turned to the "off" position, and the reactive component is discharged to the output to supply the load. The operation modes are illustrated in Fig. 4.2and Fig.4.3, respectively.

1) First operation mode (0<t<toff)

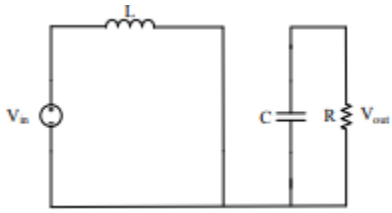

Figure 4.3Structure of boost converter while the switch is "on"

Fig.4.3 shows the equivalent circuit while the switching device is conducting. At this interval, the switch is at "on" position and the diode is reverse biased. The inductor current is increased from the minimum value to the maximum value throughout ton interval up to the switch is turned off. When the switch is turned off, the second operation mode is realized.

2) Second operation mode (toff <t<Ts)

The equivalent circuit of second operation mode is shown in Fig. 4.4. The energy stored in the inductor is added to the input voltage that forward biases the power diode, and charges the capacitor to supply the load. Therefore, the output voltage is increased comparing to the input voltage. The average input voltage is lower than output voltage, which is obtained at system output at this interval.

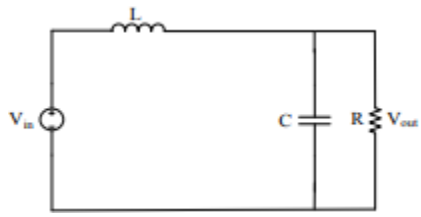

Figure 4.4Structure of boost converter while the switch is "off"

This continues until the mosfet is switched on again. The flowing current through the inductor decreases from its maximum value to the minimum value. In case the inductor charge current is lower than the required current to supply the output while switch is in the "off" situation, the output of the converter will not be boosted at the desired value. The inductor and capacitor values should be calculated in order to prevent the converter to operate in discontinuous conduction mode. Thus, it is ensured that the output voltage of the converter is greater than the input voltage at each interval. The calculated values of the modelled boost converter are given in Table 2.

Table 2. Parameters of Boost Converter

Parameter	Value
C ,Capacitor	53 µF
L, Inductor	520 µH
f_{sw}, Switching frequency	20 kHz
Vin, Input voltage of boost converter	54 V
V_{dc} link, Output voltage of boost converter	311 V

B. MPPT Controller

The MPPT algorithm is important to obtain maximum power from PV panel for output of systems according to changing solar irradiance and panel temperature. There are lots of MPPT algorithms for PV systems such as fractional short circuit current (Isc), fractional open circuit voltage (Voc), perturb and observe (P&O), incremental conductance and etc. This study is based on incremental conductance algorithm. The voltage and current sensor are used to obtain output voltage and current value of PV panel. This algorithm performance is adequate against changing atmospheric conditions [12]. The slope of the PV array should be zero at MPP as shown in Fig. 4.5. If the slope is positive, it means that the tracking point is on the left of MPP.

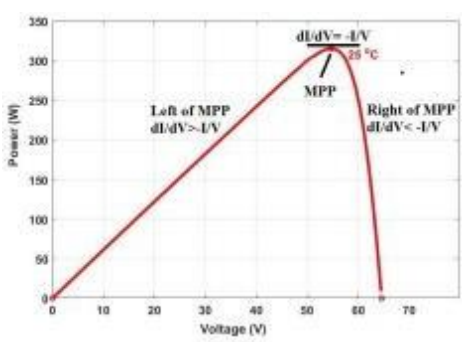

Figure 4.5 Basic idea of the incremental conductance method on a P–V curve of a PV panel Otherwise if slope is negative, it means that the tracking point is on the right of MPP. The base equations of this algorithm are given below.

$$P = V.I \tag{4}$$

$$\frac{dP}{dV} = I + V\frac{dI}{dV} \tag{5}$$

$$\frac{dP}{dV} = I + V\frac{dI}{dV} = 0 \tag{6}$$

$$\frac{dI}{dV} = -\frac{I}{V}\left(\frac{dP}{dV} = 0\right) \tag{7}$$

$$\frac{dI}{dV} > -\frac{I}{V}\left(\frac{dP}{dV} > 0\right) \tag{8}$$

$$\frac{dI}{dV} < -\frac{I}{V}\left(\frac{dP}{dV} < 0\right) \tag{9}$$

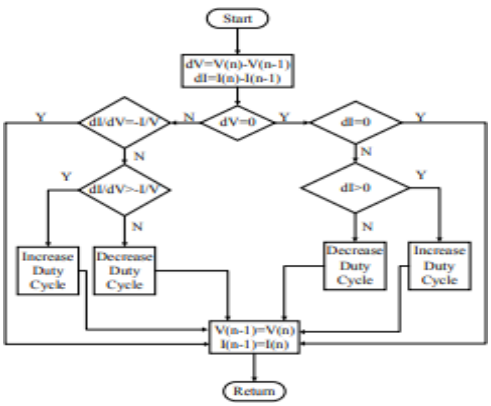

Figure 4.6. Algorithm of the incremental conductance

Fig. 4.6 shows flowchart of incremental conductance algorithm. Although incremental conductance algorithm is complex, it ensures good control under varying atmospheric conditions [13].

C. H-Bridge Inverter with PI Controller

The inverter to generate the desired output voltage and frequency level performs the dc-ac conversion. The output voltage of inverter has periodic waveform, which is not sinusoidal. The Hbridge circuit topology containing four switching components and dc source is shown in Fig. 8 [14].

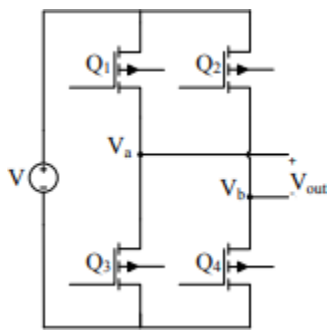

Figure 4.7 Circuit of H-bridge inverter

The switching situations are shown in Table 3. There are four different switching situations to generate the output voltage waveform.

Table 3. Switching situations of H-bridge

Situations	Conducting switching	V_a	V_b	V_{out}
1	Q1 and Q4	V/2	-V/2	V
2	Q2 and Q3	-V/2	V/2	-V
3	Q1 and Q3	V/2	V/2	0
4	Q2 and Q4	-V/2	-V/2	0

The first and second situations are used to generate AC output voltage in the table. In order to acquire these situations, pulse width modulation (PWM) is commonly used as a switching technique. There are more than one PWM techniques. The SPWM is the most commonly used technique that is obtained by comparing the sinusoidal reference and triangular waveform. The triangular waveform determines switching frequency of inverter. Frequency of reference waveform is very important since it determines frequency of inverter output voltage. The sinusoidal reference waveform is used to adjust the switch duty ratio where the Fig. 9. Shows generation of SPWM [15].

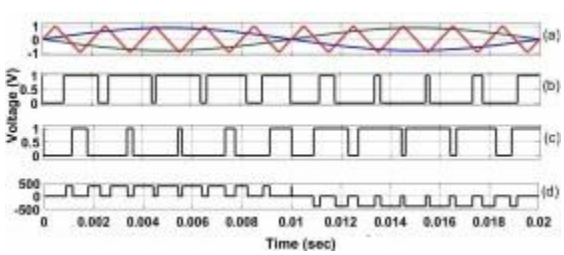

Figure 4.8 SPWM generation (a) Comparison between triangular waveform and sinusoidal reference waveform (b) Switching pulse of Q1 and Q4 (c) Switching pulse of Q2 and Q3 (d) Output voltage waveform

PI controller is used to minimize oscillation on the output voltage. The reference voltage signal is compared with output voltage signal which is used as feedback signal. Then the difference between the two signals is determined for input of PI controller and modulation index value is obtained. The modulation index is multiplied with reference sinusoidal reference wave and this is compared with triangular wave. Thus switching pulse is generated for H- bridge inverter, as shown in Fig 10. The Kp value is set to 0.0002 and Ki value is set to 0.1 in this study where these values are determined by using Ziegler-Nichols method [16].

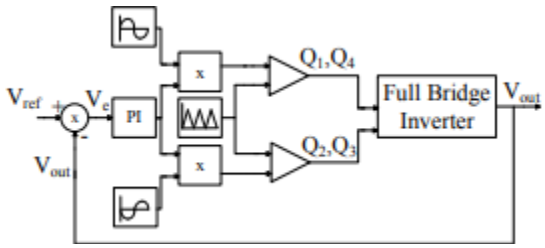

Figure 4.9. SPWM switching pulse generation with PI controller

D. LC Filter The output voltage harmonics of inverter are reduced by using LC filter in the inverter system. The output voltage harmonics can cause low power quality. The LC filter is effective to acquire high power quality by reducing the harmonic contents. The structure of LC filter is shown in Fig. 4.9 and the parameter calculations of LC filter are given in the following expressions [17].

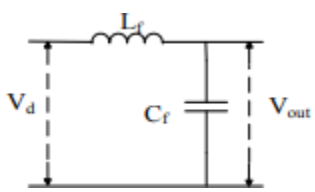

$$L_f = \frac{V_d}{4 f_s \Delta i} \quad (10)$$

$$Cf = \frac{\Delta i}{8 f_s \Delta V_o} \quad (11)$$

Where Vd is dc bus voltage, Δi is ripple ratio of current, fs is the switching frequency of H-bridge inverter and Δv is ripple ratio of output voltage.

Table 4. Calculated parameters of LC Filter

Parameter	Value
C_f ,Capacitor	7.5 µF
L_f, Inductor	259 mH
Switching frequency	10 kHz
Δi and Δv	3% and 5%

MATLAB& SIMULINK

5.1 Introduction

MATLAB (**mat**rix **lab**oratory) is a paradigm numerical environment and fourth-generation programming language. Developed by Math Works, MATLAB allows matrix manipulations, plotting of functions and data, implementation of algorithms, creation of user interfaces, and interfacing with programs written in other languages,

including C, C++, Java, Fortran and Python. Although MATLAB is intended primarily for numerical computing, an optional toolbox uses the MiPadsymbolic engine, allowing access to symbolic computing capabilities. An additional package, Semolina, adds graphical multi-domain simulation and Model-Based Design for dynamic and embedded systems.

In 2004, MATLAB had around one million users across industry and academia. MATLAB users come from various backgrounds of engineering, science, and economics. MATLAB is widely used in academic and research institutions as well as industrial enterprises.CleveMoler, the chairman of the computer science department at the University of New Mexico, started developing MATLAB in the late 1970s. He designed it to give his student's access to LINPACK and EISPACK without them having to learn FORTRAN. It soon spread to other universities and found a strong audience within the applied mathematics community. Jack little, an engineer, was exposed to it during a visit Molar made to Stanford University in 1983. Recognizing its commercial potential, he joined with Molar and Steve Banger. They rewrote MATLAB in C and founded Math Works in 1984 to continue its development. These rewritten libraries were known as JACKPAC. In 2000, MATLAB was rewritten to use a newer set of libraries for matrix manipulation, LAPACK.

MATLAB was first adopted by researchers and practitioners in control engineering, Little's specialty, but quickly spread to many other domains. It is now also used in education, in particular the teaching of linear algebra, numerical analysis, and is popular amongst scientists involved in image processing.

5.2 Simulink

Semolina is a graphical extension to MATLAB for the modelling and simulation of systems. In Semolina, systems are drawn on screen as block diagrams. Many elements of block diagrams are available (such as transfer functions, summing junctions, etc.), as well as virtual input devices (such as function generators) and output devices (such as oscilloscopes). Semolina is integrated with MATLAB and data can be easily transferred between the programs. In this tutorial, we will introduce the basics of using Semolina to model and simulate a system. Simulink is supported on UNIX, Macintosh, and Windows environments, and it is included in the student version of MATLAB for personal computers. For more information on Semolina, contact the MathWorks.The idea behind these tutorials is that you can view them in one window while running Semolina in another window. Do not confuse the windows, icons, and menus in the tutorials for your actual Semolina windows. Most images in these tutorials are not live - they simply display what you should see in your own Semolina windows. All Semolina operations should be done in your Semolina windows.

5.3 Starting Semolina

Semolina is started from the MATLAB command prompt by entering the following command: alternatively, you can click on the "Semolina Library Browser" button at the top of the MATLAB command window as shown below:

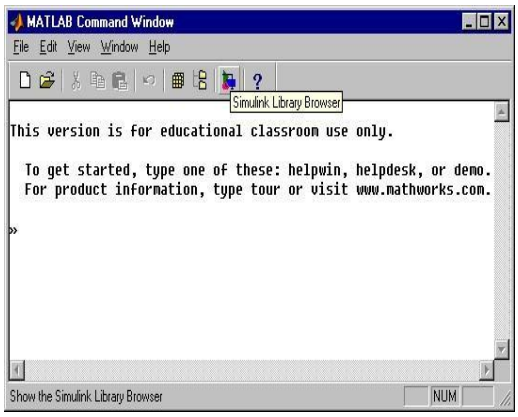

Fig.5.3.1: Semolina Library Browser

The Semolina Library Browser window should now appear on the screen. Most of the blocks needed for modelling basic systems can be found in the subfolders of the main "Semolina" folder (opened by clicking on the "+" in front of "Semolina"). Once the "Semolina" folder has been opened, the Library Browser window should look like:

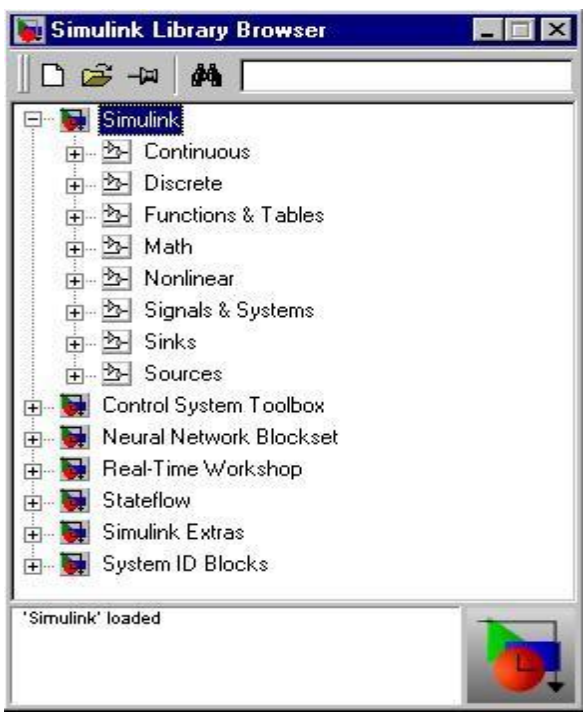

Fig.5.3.2: Library Browser window

5.3.1 Basic elements

There are two major classes of elements in Semolina: **blocks** and **lines**. Blocks are used to generate, modify, combine, output, and display signals. Lines are used to transfer signals from one block to another.

5.3.2 Blocks

The subfolders underneath the "Semolina" folder indicate the general classes of blocks available for us to use:

- Continuous: Linear, continuous-time system elements (integrators, transfer functions, state-space models, etc.)
- Discrete: Linear, discrete-time system elements (integrators, transfer functions, state-space models, etc.)
- Functions & Tables: User-defined functions and tables for interpolating function values
- Math: Mathematical operators (sum, gain, dot product, etc.)
- Nonlinear: Nonlinear operators (coulomb/viscous friction, switches, relays, etc.)
- Signals & Systems: Blocks for controlling/monitoring signal(s) and for creating subsystems
- Sinks: Used to output or display signals (displays, scopes, graphs, etc.)
- Sources: Used to generate various signals (step, ramp, sinusoidal, etc.)

Blocks have zero to several input terminals and zero to several output terminals. Unused input terminals are indicated by a small open triangle. Unused output terminals are indicated by a small triangular point. The block shown below has an unused input terminal on the left and an unused output terminal on the right.

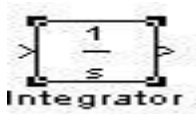

Fig.5.3.3: Integrator

5.3.2 Lines

Lines transmit signals in the direction indicated by the arrow. Lines must always transmit signals from the output terminal of one block to the input terminal of another block. One exception to this is that a line can tap off of another line. This sends the original signal to each of two (or more) destination blocks, as shown below:

Lines can never inject a signal *into* another line; lines must be combined through the use of a block such as a summing junction.

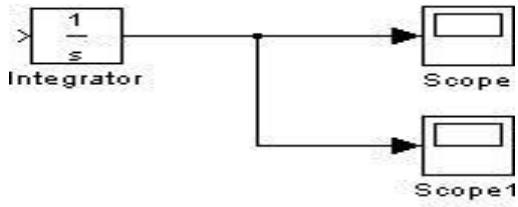

Fig.5.3.4: Summing junction.

A signal can be either a scalar signal or a vector signal. For Single-Input, Single-Output systems, scalar signals are generally used. For Multi-Input, Multi-Output systems, vector signals are often used, consisting of two or more scalar signals. The lines used to transmit scalar and vector signals are identical. The type of signal carried by a line is determined by the blocks on either end of the line.

5.3.3 Building a System

To demonstrate how a system is represented using Semolina, we will build the block diagram for a simple model consisting of a sinusoidal input multiplied by a constant gain, which is shown below:

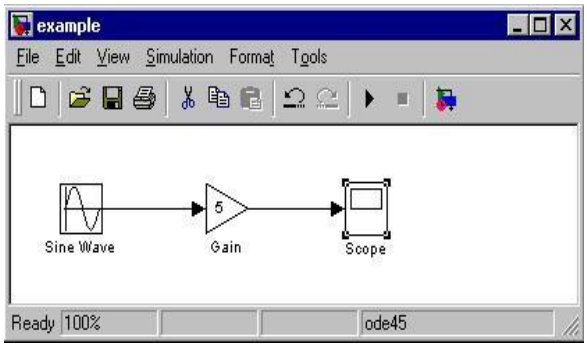

Fig.5.3.5: The block diagram for a simple model

This model will consist of three blocks: Sine Wave, Gain, and Scope. The Sine Wave is a Source Block from which a sinusoidal input signal originates. This signal is transferred through a line in the direction indicated by the arrow to the Gain Math Block. The Gain block modifies its input signal (multiplies it by a constant value) and outputs a new signal through a line to the Scope block. The Scope is a Sink Block used to display a signal (much like an oscilloscope).

We begin building our system by bringing up a new model window in which to create the block diagram. This is done by clicking on the "New Model" button in the toolbar of the Semolina Library Browser (looks like a blank page).

Building the system model is then accomplished through a series of steps:

1. The necessary blocks are gathered from the Library Browser and placed in the model window.
2. The parameters of the blocks are then modified to correspond with the system we are modelling.
3. Finally, the blocks are connected with lines to complete the model.

Each of these steps will be explained in detail using our example system. Once a system is built, simulations are run to analyse its behaviour.

5.3.4 Gathering blocks

Each of the blocks we will use in our example model will be taken from the Semolina Library Browser. To place the Sine Wave block into the model window, follow these steps:

1. Click on the "+" in front of "Sources" (this is a subfolder beneath the "Semolina" folder) to display the various source blocks available for us to use.
2. Scroll down until you see the "Sine Wave" block. Clicking on this will display a short explanation of what that block does in the space below the folder list:
3. To insert a Sine Wave block into your model window, click on it in the Library Browser and drag the block into your workspace.

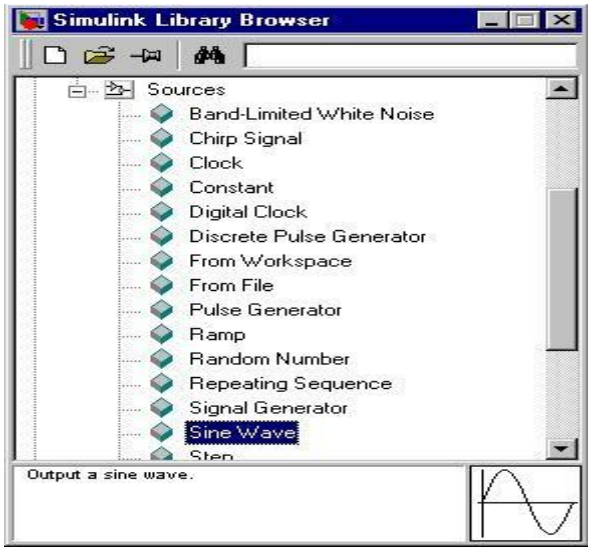

Fig.5.3.6: Simulink library browser

The same method can be used to place the Gain and Scope blocks in the model window. The "Gain" block can be found in the "Math" subfolder and the "Scope" block is located in the "Sink" subfolder. Arrange the three blocks in the workspace (done by selecting and dragging an individual block to a new location) so that they look similar to the following:

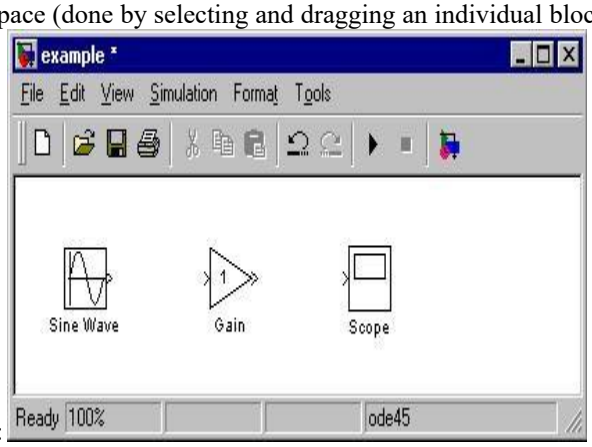

Fig.5.3.7: Model window

5.3.5 Modifying the blocks

Semolina allows us to modify the blocks in our model so that they accurately reflect the characteristics of the system we are analysing. For example, we can modify the Sine Wave block by double-clicking on it. Doing so will cause the following window to appear:

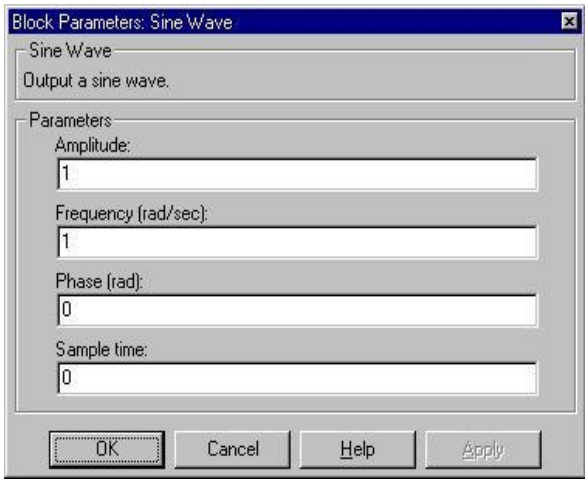

Fig.5.3.8: Sine Wave block

This window allows us to adjust the amplitude, frequency, and phase shift of the sinusoidal input. The "Sample time" value indicates the time interval between successive readings of the signal. Setting this value to 0 indicates the signal is sampled continuously.

Let us assume that our system's sinusoidal input has:

- Amplitude = 2
- Frequency = pi
- Phase = pi/2

Enter these values into the appropriate fields (leave the "Sample time" set to 0) and click "OK" to accept them and exit the window. Note that the frequency and phase for our system contain 'pi' (3.1415...). These values can be entered into Semolina just as they have been shown.

Next, we modify the Gain block by double-clicking on it in the model window. The following window will then appear:

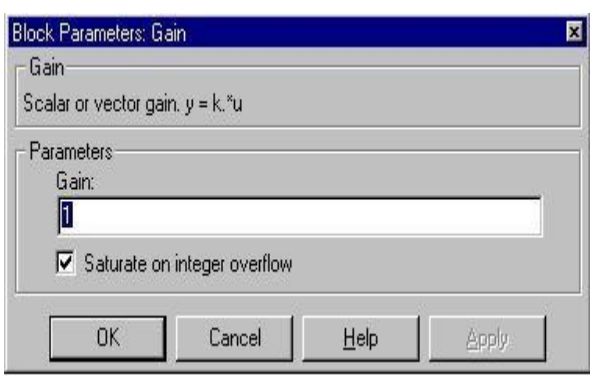

Fig.5.3.9: Gain block

Note that Semolina gives a brief explanation of the block's function in the top portion of this window. In the case of the Gain block, the signal input to the block (u) is multiplied by a constant (k) to create the block's output signal (y). Changing the "Gain" parameter in this window changes the value of k.

For our system, we will let k = 5. Enter this value in the "Gain" field, and click "OK" to close the window.

The Scope block simply plots its input signal as a function of time, and thus there are no system parameters that we can change for it. We will look at the Scope block in more detail after we have run our simulation.

5.3.6 Connecting the Blocks

For a block diagram to accurately reflect the system we are modelling, the Semolina blocks must be properly connected. In our example system, the signal output by the Sine Wave block is transmitted to the Gain block. The Gain block amplifies this signal and outputs its new value to the Scope block, which graphs the signal as a function of time. Thus, we need to draw lines from the output of the Sine Wave block to the input of the Gain block, and from the output of the Gain block to the input of the Scope block.

Lines are drawn by dragging the mouse from where a signal starts (output terminal of a block) to where it ends (input terminal of another block). When drawing lines, it is important to make sure that the signal reaches each of its intended terminals. Semolina will turn the mouse pointer into a crosshair when it is close enough to an output terminal to begin drawing a line, and the pointer will change into a double crosshair when it is close enough to snap to an input terminal. A signal is properly connected if its arrowhead is filled in. If the arrowhead is open, it means the signal is not connected to both blocks. To fix an open signal, you can treat the open arrowhead as an output terminal and continue drawing the line to an input terminal in the same manner as explained before.

Properly Connected Signal Open Signal

Fig.5.3.10: Connection difference

When drawing lines, you do not need to worry about the path you follow. The lines will route themselves automatically. Once blocks are connected, they can be repositioned for a neater appearance. This is done by clicking on and dragging each block to its desired location (signals will stay properly connected and will re-route themselves).After drawing in the lines and repositioning the blocks, the example system model should look like:

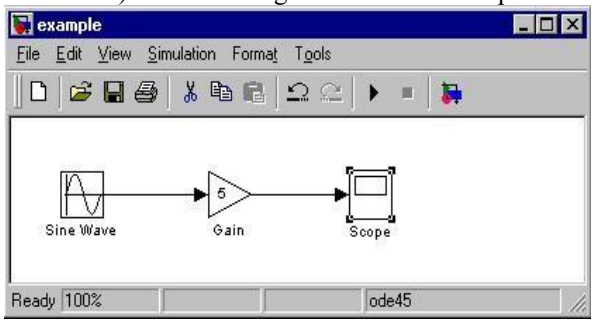

Fig.5.3.11: System model

In some models, it will be necessary to branch a signal so that it is transmitted to two or more different input terminals. This is done by first placing the mouse cursor at the location where the signal is to branch. Then, using either the CTRL key in conjunction with the left mouse button or just the right mouse button, drag the new line to its intended destination. This method was used to construct the branch in the Sine Wave output signal shown below:

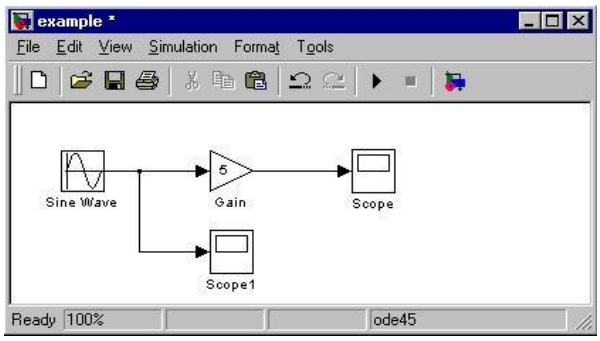

Fig.5.3.12: Sine wave model

The routing of lines and the location of branches can be changed by dragging them to their desired new position. To delete an incorrectly drawn line, simply click on it to select it, and hit the DELETE key.

5.3.7. Running Simulations

Now that our model has been constructed, we are ready to simulate the system. To do this, go to the **Simulation** menu and click on **Start**, or just click on the "Start/Pause Simulation" button in the model window toolbar (looks like the "Play" button on a VCR). Because our example is a relatively simple model, its simulation runs almost instantaneously. With more complicated systems, however, you will be able to see the progress of the simulation by observing its running time in the lower box of the model window. Double-click the Scope block to view the output of the Gain block for the simulation as a function of time. Once the Scope window appears, click the "Auto scale" button in its toolbar (looks like a pair of binoculars) to scale the graph to better fit the window. Having done this, you should see the following:

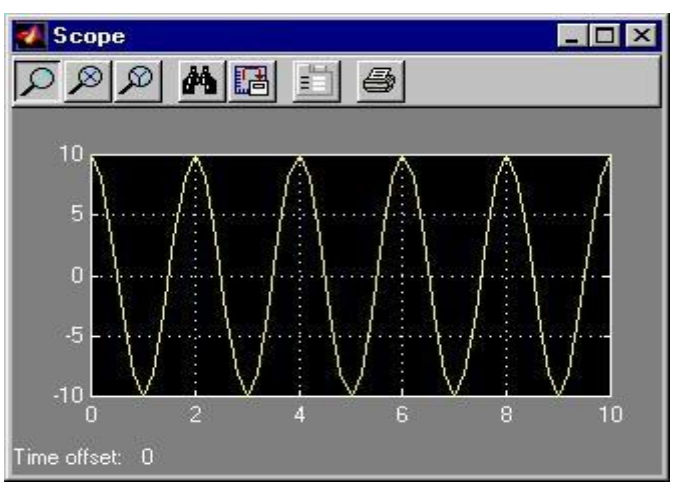

Fig.5.3.13: Scope

Note that the output of our system appears as a cosine curve with a period of 2 seconds and amplitude equal to 10. Does this result agree with the system parameters we set? Its amplitude makes sense when we consider that the amplitude of the input signal was 2 and the constant gain of the system was 5 (2 x 5 = 10). The output's period should be the same as that of the input signal, and this value is a function of the frequency we entered for the Sine Wave block (which was set equal to pi). Finally, the output's shape as a cosine curve is due to the phase value of pi/2 we set for the input (sine and cosine graphs differ by a phase shift of pi/2).

What if we were to modify the gain of the system to be 0.5? How would this affect the output of the Gain block as observed by the Scope? Make this change by double-clicking on the Gain block and changing the gain value to 0.5. Then, re-run the simulation and view the Scope (the Scope graph will not change unless the simulation is re-run, even though the gain value has been modified). The Scope graph should now look like the following:

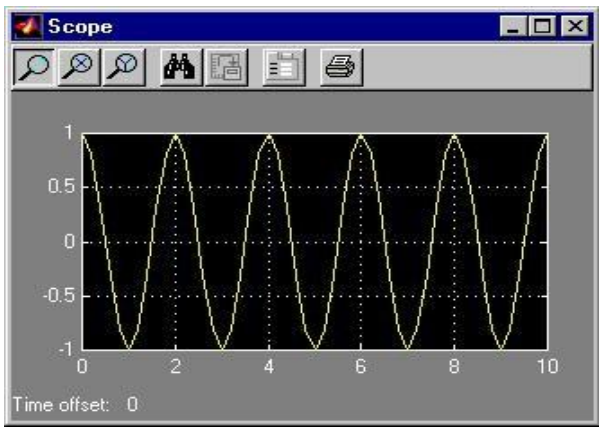

Fig.5.3.14: Scope graph

Note that the only difference between this output and the one from our original system is the amplitude of the cosine curve. In the second case, the amplitude is equal to 1, or 1/10th of 10, which is a result of the gain value being 1/10th as large as it originally was.

EXPECTED SIMULATION RESULTS

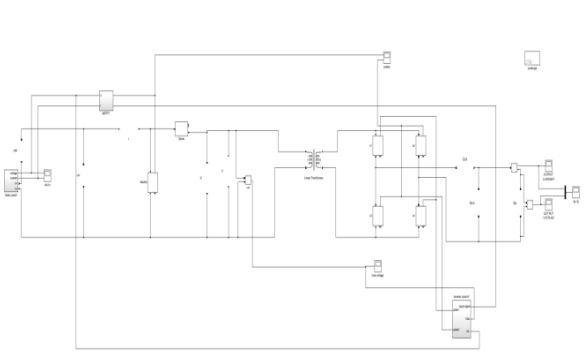

Fig. matlab/simulink diagram of proposed system

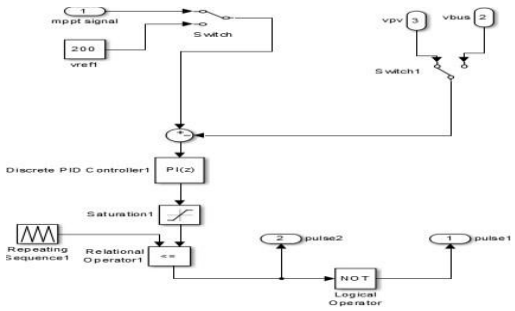

Fig micro inverter control block

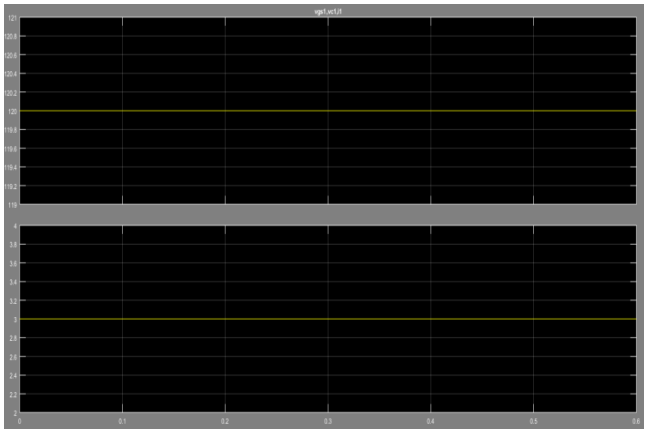

Fig 1.Input voltage and current

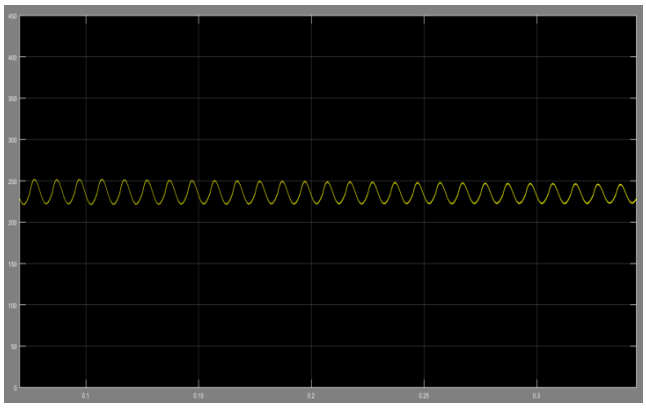

Fig 2. Boost up voltage

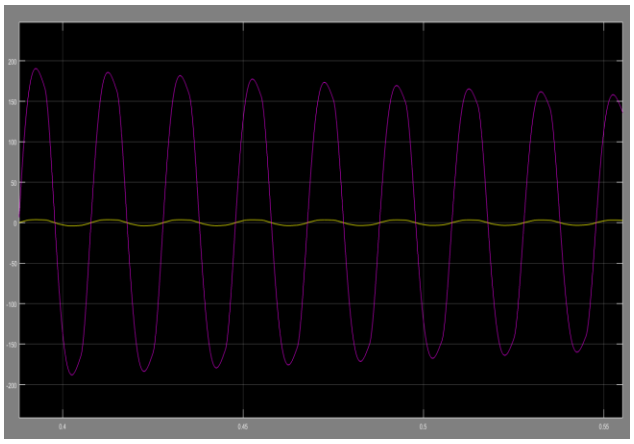

Fig3. Grid voltage and current

CONCLUSION

This paper presents the design and analysis of a micro inverter for single-phase PV energy system. The PV system, which has minimal number of semiconductor and high efficiency, is analysed by simulating with MATLAB Simulink software under various solar irradiance. The dc voltage of PV panel has been converted to ac voltage at the output of micro inverter. Despite of increasing or decreasing solar irradiance, output voltage of the inverter does not change and is acquired as pure sine waveform. The output voltage is tracked at the reference value and it remains constant at desired value owing to PI controller operated H-bridge inverter. The output power and harmonic analysis approve that the proposed inverter is capable to provide the power conversion at the required power rate and power quality. The THD analyses also meet the requirements of the international standards with 0.51% ratios. In future studies, the proposed micro

REFERENCES

[1] G. K. Singh, Solar power generation by PV (photovoltaic) technology: A review, Energy, vol. 53, pp. 113, May. 2013.

[2] D. Muoio, Tesla has said little about its solar roof since it began taking orders here's what we do know, Internet: http://www.businessinsider.com/tesla-solar-roof-details-features-pictures- 2017-8/, Aug. 4, 2017 [Nov. 21,2017]

[3] A. M¨aki and S. Valkealahti, Power losses in log string and parallel connected short strings of series-connected silicon-based photovoltaic modules due to partial shading conditions, IEEE Trans. Energy Convers., vol. 27, no. 1, pp. 173-183. Mar. 2012.

[4] N. D. Kaushinka and A. K. Rai, An investigation of mismatch losses in solar photovoltaic cell networks, Energy vol. 32, no. 5, pp. 755-759. May 2007

[5] R. C. N. Pilawa-Podgurski and D. J. Perreault, Submodule integrated distributed maximum power point tracking for solar photovoltaic applications, IEEE Trans. Power Electron. vol. 28, no. 6, pp. 29572967, Jun. 2013.

[6] N. Sukesh, M. Pahlevaninezhad and P. K. Jain, An investigation of mismatch losses in solar photovoltaic cell networks, IEEE Transactionson Industrial Electronics, vol. 61, no. 4, pp. 1819-1833, Apr. 2014.

[7] T. Shimizu, K. Wada, and N. Nakamura, Flyback-Type Single-Phase Utility Interactive Inverter With Power Pulsation Decoupling on the DC Input for an AC Photovoltaic Module System, IEEE Trans PowerElectron, vol. 21, no. 5, pp. 1264 - 1272, Sept. 2006.

[8] T. Shimizu, K. Wada, and N. Nakamura, A flyback-type single phase utility interactive inverter with low-frequency ripple current reduction on the DC input for an AC photovoltaic module system, in Proc. IEEE PESC,2002, pp. 1483-1488.

[9] N. Kasa, T. Iida, and L. Chen, Flyback inverter controlled by sensorless current MPPT for photovoltaic power system, IEEE Trans. Ind. Electron., vol. 52, no. 4, pp. 11451152, Aug. 2005.

[10] M. A. Rezaei, K. J. Lee and A. Q. Huang. A High-Efficiency Flyback Micro-inverter With a New Adaptive Snubber for Photovoltaic Applications, IEEE Trans. on Power Electron., vol. 31, no. 1, pp. 318-327, Jan. 2016.

[11] M. Pahlevani, S. Eren, J. M. Guerrero and P. Jain, A Hybrid Estimator for Active/Reactive Power Control of Single-Phase Distributed Generation Systems With Energy Storage, in IEEE Transactions on Power Electronics, vol. 31, no. 4, pp. 2919-2936, April 2016.

[12] S. Eren, M. Pahlevaninezhad, A. Bakhshai and P. K. Jain, Composite Nonlinear Feedback Control and Stability Analysis of a Grid-Connected Voltage Source Inverter With LCL Filter, in IEEE Transactions onIndustrial Electronics, vol. 60, no. 11, pp. 5059-5074, Nov. 2013.

[13] R. Hermann and A. Krener. Nonlinear controllability and observability, IEEE Transactions on Automatic Control, vol. 22, no. 5, pp. 728-740 Oct. 1977

[14] M. Pahlevaninezhad, S. Eren, H. Pahlevani, I. Askarian and S. Bagawade. Digital Current Sensorless Control of Current-Driven Full-Bridge DC/DC Converters, IEEE Trans. on Power Electron., vol. 33, no. 2, pp.1797-1815, Mar. 2017

[15] S. Diop and M. Wang, Equivalence between algebraic observability and local generic observability, Proc. 32nd IEEE Conf. on Decis. Control,1993 pp. 2864-2865.

[16] I. Askarian, S. Eren, M. Pahlevani and A. Knight, Digital Real-Time Harmonic Estimator for Power Converters in Future Micro-Grids, IEEETransactions on Smart Grid, June 2017.

[17] M. Pahlevani, S. Pan, S. Eren, A. Bakhshai and P. Jain, An Adaptive Nonlinear Current Observer for Boost PFC AC/DC Converters, in IEEETransactions on Industrial Electronics, vol. 61, no. 12, pp. 6720-6729, Dec. 2014.

[18] S. Eren, M. Pahlevani, A. Bakhshai and P. Jain, A Digital Current Control Technique for Grid-Connected AC/DC Converters Used for Energy Storage Systems, in IEEE Transactions on Power Electronics, vol. 32, no. 5, pp. 3970-3988, May 2017.