FACT Devices Examination for Voltage stability of WEC Integrated with Week Grid: Case study of a Selected Site

Nishi Singh[1] Dr.Prateek Nigam[2], Dr.Kishor Thakre[3] ,Achie Malviya[4]

Abstract

Key Words: *FACT Devices, Wind Energy Convertor, Grid Integration, Renewable Energy Sources, MATLAB*

In today's era the usage of wind power for generation of electricity is used invariably. In comparison with other sources like thermal power plant and Diesel Power plant it is clean and eco-friendly in nature In India use of renewable energy sources is growing day by day. Wind power is having excellent potential in India. Only problem associated with power is having variable attribute of wind which affects overall generation of power and there they need a reactive power management for generation. Now a Days several Wind power projects are operated in conjunction with the grid. The power generated from wind power plant is variable and it is requiring an efficient power control for these energy sources. Wind turbines must be able to recover short duration faults and voltage imbalances during speed variations without disconnecting from the grid. In this paper an attempt has been made to resolve the problem of voltage stability of concern old site which is in Madhya Pradesh India whose considered wind turbines is E- 31 Ratedi Enercon India. The voltage level of the considered grid-connected wind convertor is being analysed through its 1-year data under various operating conditions were output power varies with speed is simulated, also short duration faults are created on a prepared base model, the faults intensity is of E-31 collected data via SCADA. All simulation work is been carried out in MATLAB 2021a Software. Finally the base model is simulated with FACT devices SSSC, STATCOM, SVC, UPFC and it is found that STATCOM device is best for Voltage Profile Imbalances for faults with shorter Durations.

I. Introduction

India is the third-largest energy consumer in the world and ranks third in the attractiveness of renewable energy countries rating for 2021. The nation has set a lofty goal to generate 175 GW of renewable energy by the end of 2022, which will increase to 500 GW by 2030. The overall installed wind power capacity was 40.893 GW as of July 31, 2022, ranking it as the fourth biggest installed wind power capacity worldwide. But the unpredictable level of the nature of wind causes fluctuating wind power which gives rise of instability problem to already existing network, along with other associated problem such as voltage regulation, reactive power, fluctuation, harmonics, flickers etc. A wind farm must be able to support the network and operate similarly to a conventional power generating system in order to meet the demands of the growing use of wind energy.

The active power supply mainly depends upon the potential of the wind power produced and wind turbine generator design. On the other hand, the demand for reactive power is influenced by the grid's recovered power quality and conversion devices. The wind farms that have access to the electrical grid contribute to fluctuations, the redistribution of reactive power, and even voltage breakdown. Distribution network operators have a significant difficulty as a result of voltage variation brought on by fluctuating wind generation and dynamic voltage stability.

Wind farm technology varies in terms of its capabilities, making reactive power regulation crucial [1-3]. As wind farms are usually located in remote areas, reactive electricity needs to be transported over long distances, resulting in power loss. Reactive power control is essential for wind farms to respond to voltage

changes, which is related to the characteristic of the grid. The impact of injecting reactive power at various voltage levels depends on network short circuit capacity and impedance. Therefore, reactive power compensation is crucial for wind farm operation and contribution to the power grid, as uncompensated reactive power causes stress on the hosting grid and casting effects. Reactive power compensation aims to keep the voltage profile of a wind farm at an appropriate level and minimize power losses when transferring power to the main grid while complying with connection requirements related to reactive power exchange set by the grid code [9].

The Under Load Tap Changer (ULTC) of the station transformer is the primary mechanism for adjusting reactive power. Other compensator devices, such as static capacitors [25] and FACTS devices, including Static Var Compensators (SVC), Unified Power Flow Controller (UPFC), Unified Power Quality Conditioner (UPQC), and Distributed Static Synchronous Compensators (DSTATCOM) can be used to regulate reactive power requirements if the ULTC action does not comply with grid requirements. The decision to apply VAR compensation techniques depends on the feasibility study, considering technical requirements and economic considerations. These devices are acceptable for controlling voltage stabilization and are currently suggested for controlling the reactive power requirements of wind generators. This enhances the acceptance of wind power entering the global distribution system.

Over the past few years, wind energy has been increasingly used worldwide for electricity generation due to various technical, economic, and environmental benefits. Offshore wind farms generate bulk power that is integrated into electric power grids through high-voltage transmission lines (TLs). For accommodating large flows of wind power, existing TLs may need upgrading, or new TLs may need construction. FACTS-based compensating devices are increasingly being considered to improve the capacity to transfer power of existing TLs connecting wind farms. One of the most crucial FACTS instruments is the UPFC [27-30], which is used for independent and simultaneous control of the line active and reactive power flow by efficiently controlling the line voltage and line impedance. However, the efficacy of traditional distance relaying-based TL protection methods is significantly impacted by the nonlinear power versus wind speed characteristics of wind farms and the unpredictable line impedance variation during different operating modes of the UPFC. The primary goal of the current article is to develop a better protection plan for TLs associated with wind farms that have received UPFC compensation.

.

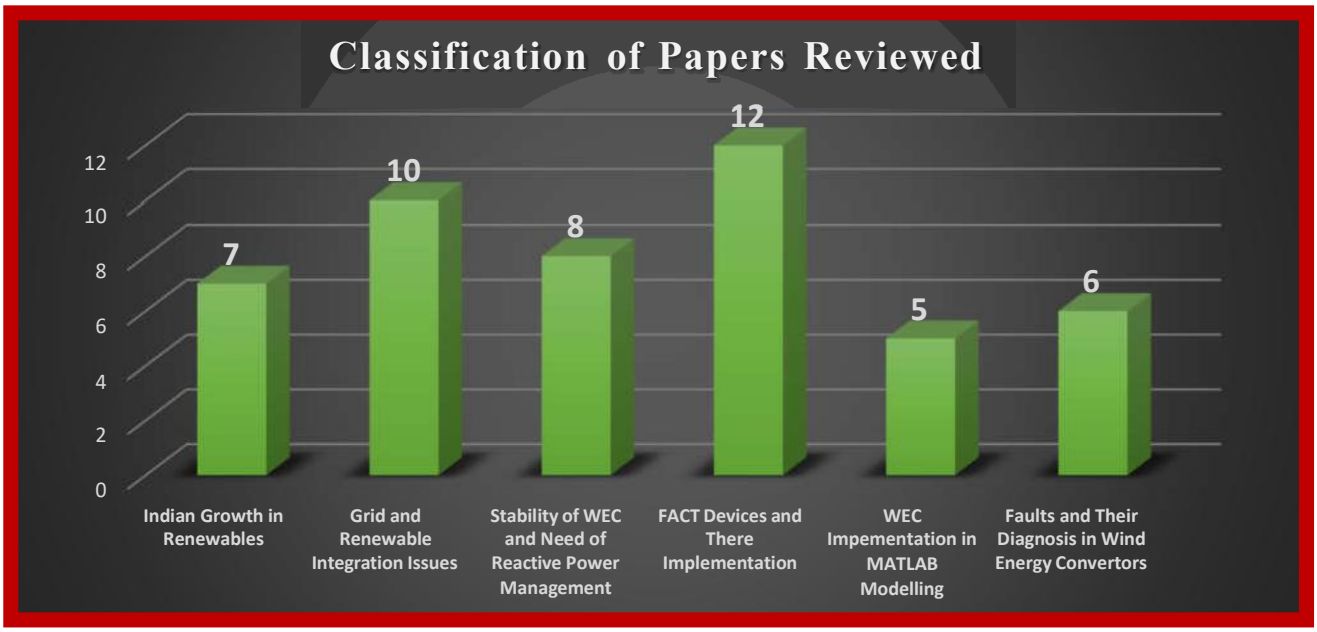

Figure 1: No of Papers Needed for MATLAB Implementation Of WEC with Grid In MATLAB

In the figure no 1 classification of research papers is shown which were associated with This paper to Model a Complete WEC (Wind Energy Convertor) of any location, also after this review study a plan and methodology is adopted whose structure is shown in figure 2. according to this plan and research goals the paper is classified further in different section Accordingly. In section II a brief literature work is explained of the related work in section III the details of Ratedi Site of Madhya Pradesh is Given in section IV Voltage Instability issues causes and Role of FACT Devices are Examined in section V The 9 MW wind Plant Model is Implemented in MATLAB and Different FACT Devices are simulated for Without and With Fault Conditions, in the same section Results obtained are Analysed and Finally in section VI paper is Concluded with a thanks to all the References considered

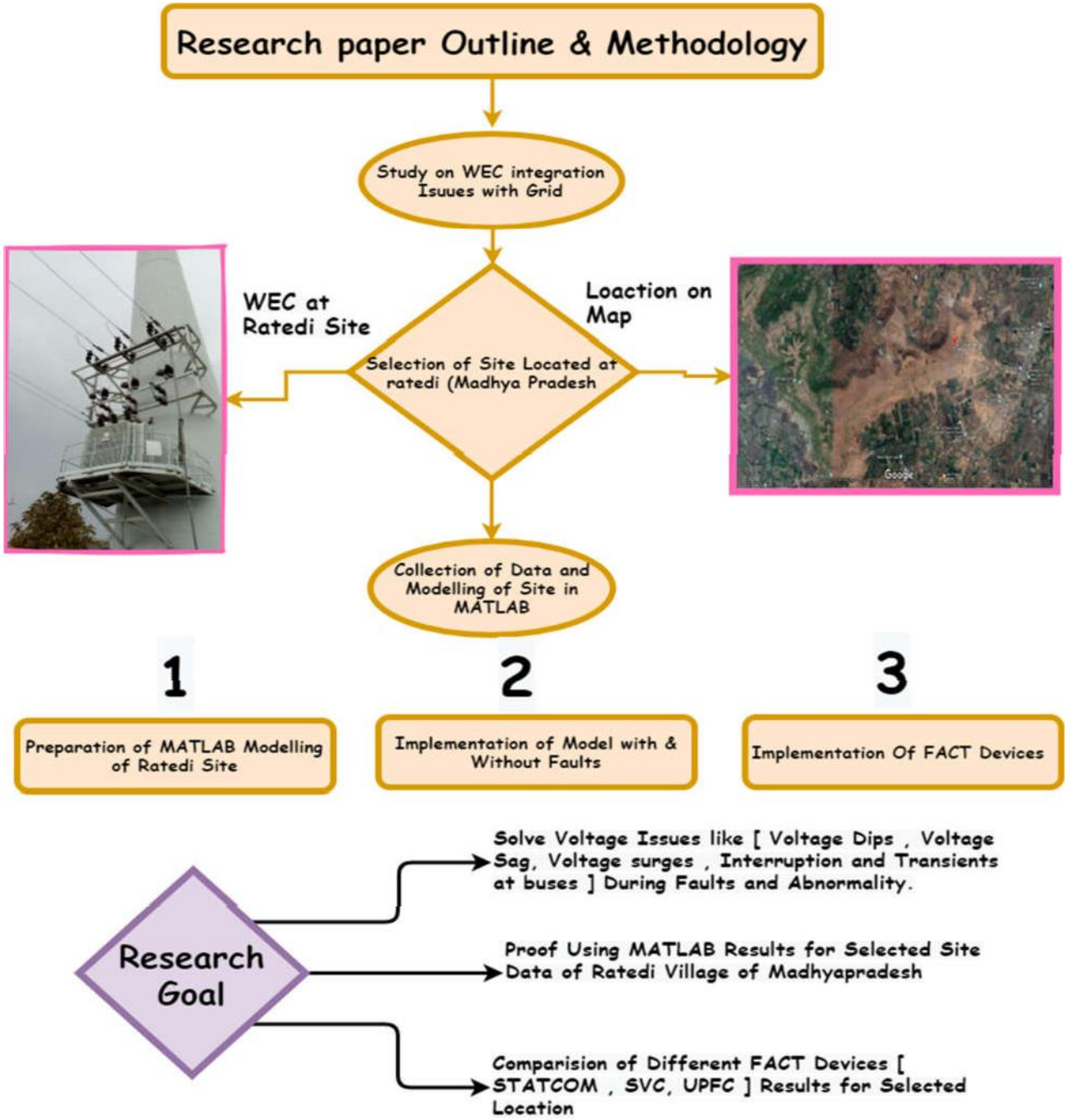

Figure 2: Proposed Plan and Research Goals for the Old site [Ratedi village Bhopal]

II. Related previous work

Author	Year	Title	Findings
Mahmoud Ebadian *et al*. [4]	2014	Investigating the effect of high level of wind penetration on voltage stability by quasi-static time-domain simulation.	They use the Quasi Static Time Domain Simulations for Voltage stability analysisof Squirrel Cage induction generator.
J.Singh *et al*. [5]	2015	Voltage Stability of Wind Power by Using the FACTS Devices	They review several FACTS controllers for Voltage stability analysis (VSA) of the power system.
Luis Badesa *et al*. [6]	2016	Impact of Wind Generation on Dynamic Voltage Stability and Influence of the Point of Interconnection	They highlight the analysis of PCC for remotely located Wind Energy System.
Ramazan Bayindir *et al*. [7]	2016	Effects of renewable energy sources on the power system	They use Power Factory Software for Simulating RE Sources & comparative analysis between emergent changes to thebus voltage in the system before and after the interconnection of non-conventionalenergy sources is presented.
Z.D. Wu et al. [8]	2017	Influence on voltage stability of wind power connected to the grid	They used DFIG based WT's model and perform simulation in the PSCAD tool for capacity-based Voltage stability analysis of the system.
N. K. Rajalwal and P. Mishra. et al. [10]	2018	Impact of DFIG on voltage stability of a network in smart grid: An analysis	They use the Modal analysis method for voltage stability analysis of the Wind-based DG system.
Amirreza Gholizadeh et al. [11]	2018	A scenario-based voltage stability constrained planning model for integration of large-scale wind farms	They employed the 118 IEEE Test bus system to conduct a research on the Iranian grid for the interconnection of wind power. Additionally, describe the planning model with Voltage Stability constraints.
Sree Latha K et al. [12]	2018	Dynamic Voltage Stability Enhancement of A Wind Farm Connected To Grid Using Facts- A Comparison	They emphasized the use of FACTS for Voltage Stability Enhancement they use SVC & Statcom for Wind Interconnected Power System.
Sarika D. Patil et al. [1]	2012	Improvement of Power Quality Considering Voltage Stability in Grid Connected System by FACTS Devices	They recommend the Use of Statcom for improving both Steady State and the transient response of the entire system.
Y. Zhou et al. [2]	2013	Connecting Wind Power Plant with Weak Grid Challenges and Solutions	They discussed the issues in the integration of WEG's in the existing grid & highlights the issue of Voltage stability.

TABLE 1 Summary of Literature Review

Research Gap: The literature review is an important stage in each research process. A review of previous studies reveals the works and studies done by individual researchers & institutions help to establish further the need for the study. After reviewing the previous studies and literature, it has

been noted that among several grid integration issues, voltage stability is a very crucial issue in wind-based distributed generation systems. Several methodologies were used for the enhancement of voltage stability. In the next table i.e table no 2 researches on FACTS devices to Improve Stability of WIND farms and WEC is Summarised which covers recent research papers of 2020-2022

Author	Year	Title	Key Contribution / Findings	Limitations
Sheikh et al [32].	2021	Voltage Stability Enhancement of Grid-Connected Wind Farm Using Hybrid D-STATCOM	Hybrid D-STATCOM improves voltage stability, reduces voltage deviations and active power loss	Simulation-based study, no cost analysis
Nallagonda and Chandorkar [33]	2021	A Novel Voltage Control Strategy for a Hybrid Wind Energy Conversion System with STATCOM	STATCOM and hybrid voltage control strategy improves voltage stability, reduces THD and power loss	Simulation-based study, no comparison with other FACTS devices
Li et al [34].	2021	Voltage Stability Enhancement of Wind Farm Based on Hybrid SVC-STATCOM and Optimal Power Flow	Hybrid SVC-STATCOM improves voltage stability and reduces power loss, OPF used for optimal operation	Simulation-based study, no comparison with other FACTS devices
Guo et al. [35]	2021	Voltage Stability Enhancement of Grid-Connected Wind Farms Using a Hybrid UPFC	Hybrid UPFC improves voltage stability, reduces voltage deviations, and active power loss	Simulation-based study, no comparison with other FACTS devices
Fahmy et al. [36]	2022	Voltage Stability Improvement of Wind Farm Based on Hybrid UPQC-STATCOM	Hybrid UPQC-STATCOM improves voltage stability, reduces voltage deviations, and active power loss	Simulation-based study, no comparison with other FACTS devices
Dogramaci and Dursun[37]	2022	Power Quality Enhancement and Voltage Stability Improvement of a Wave Energy Converter System with a Hybrid D-STATCOM	Hybrid D-STATCOM improves voltage stability and reduces THD, active power loss	Simulation-based study, no comparison with other FACTS devices

Reviewing the Above literature, a real case study is considered in this paper of a site and Modelling is simulated in the later section of the paper using MATLAB.

III. Details of 9 MW Ratedi Wind Power Plant

Madhya Pradesh is the second largest state in size, geographically located at 22.42º N and 72.54º. It is bordered by Chhattisgarh at the east, Uttar Pradesh at northeast, Gujarat at the west, Rajasthan at the northwest, Gujarat at the west, Maharashtra at the South. It ranks 7th in India among the top 10 wind power producing states. Table 2 illustrates the district wise capacity of wind power generation.

TABLE 4.1 DISTRICT WISE WIND POWER CAPACITY

S.No.	*District*	*Proposed Capacity [in MW]*	*Installed Capacity [in MW]*	*Mean Wind Power Density at 50m W/m²*
1	Dewas	180.75	129.75	*287*
2	Ratlam	604.8	105.25	*255*
3	Mandsaur	159.5	4.80	*222*
4	Betul	236	Not Yet Installed	*215*
5	Badwani	167.50	Not Yet Installed	*255*
6	**Shajapur**	**139.20**	**54.00**	***217***

Table 2 district wise capacity of wind power generation.

As illustrate in above table it is noted that District Ratlam is having the supreme potential of wind power. As of now in following district installation has been done in Dewas, Ratlam, Mandsaur and in Shajapur. A total of 598 wind monitoring sites are installed in the whole country, among which 225 sites are identified as a wind power site with wind power density having value greater than 200 W/m^2. The data of windy speed sites of Madhya Pradesh is illustrated in Table 2 Government of India have installed special setups for wind speed monitoring sites in various districts like Barwani, Betul, Dewas, Khargone, Ratlam, Shajapur etc., these districts have good potential of wind power. It is identified that Barwani district have high wind speed.As of now many projects were in operation in District Dewas and in Ratlam.

In this work, Wind Power Plant located at Ratedi Village, District Dewas, Madhyapradesh is taken into consideration, this plant is 45.9 km from Indore and 165 km from Bhopal. Fig. 3 shows geographical Location of Ratedi Wind Power Plant.

Figure. 3 (a) Geographical Location of Ratedi Wind Power Plant **Fig.3(b) Ratedi** Wind Power Plant

The above figure shows Ratedi Wind Farm. In this wind power plant, 34 machines of 800 KW are installed and these machines are managed by KS Oils Pvt. Ltd. Whereas another section of the plant is having 19 machines of 800 KW which is managed by Manganese Ore (India) Limited, Nagpur. All the machines are controlled with the help of an Online SCADA Software system known as the Wind Asset Monitoring System, in this system the probable faults which may occur in the WEG's system are programmed and interface with microcontroller-based system. Measures are taken in such a manner that many remedial actionscan be taken from a remote-control system i.e. wind asset monitoring system. The wind speeddata is mentioned in appendix.

IV Voltage Stability Problem and Roll of FACT devices

4.1 Voltage Stability of Wind Based DG System

The Voltage Stability is classified as:

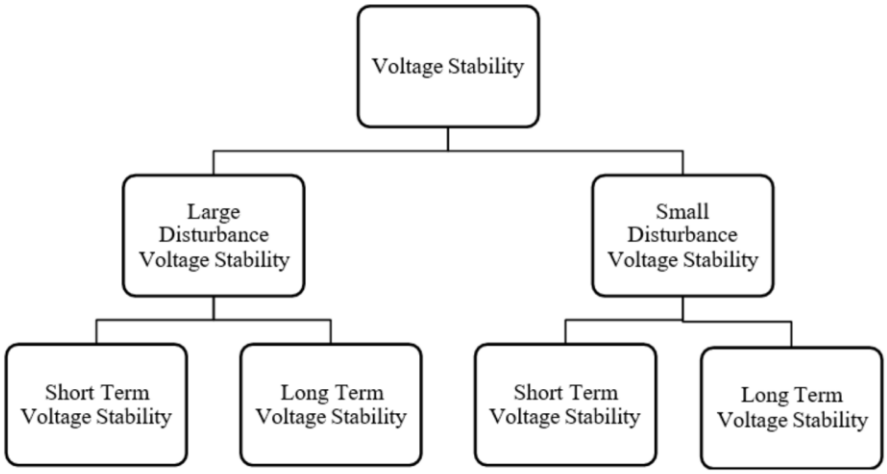

Figure. 4 Classification of Voltage Stability

Following are major causes for voltage Instability:

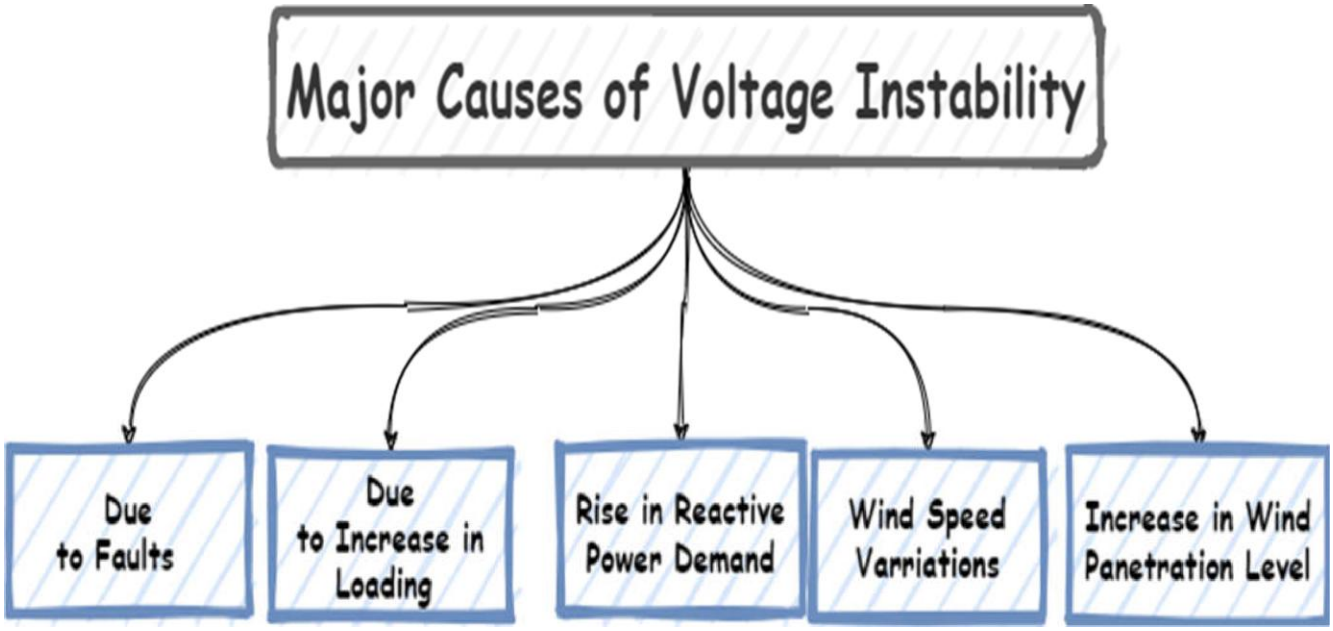

Figure. 5 Causes of Voltage Stability

4.2 Roll of FACT devices

To improve the power handling capacity, transient stability, system reliability, load management, and power flow control of the transmission line, FACTS are solid state flexible devices. Fig. 3 depicts the FACTS device family members.: (1) Thyristor Controlled Series Compensator (TCSC) (2) Thyristor Switched Series Reactor (TSSR) (3) Thyristor Controlled Series Reactor (TCSR) (4) Thyristor Switched Series Capacitor (TSSC) (5) Static Var Compensator (SVC) (6) Static Synchronous Compensator (STATCOM) (7) Static Synchronous Series Compensator (SSSC) (8) Thyristor Controlled Phase Shifting Transformer (TCPST) (9) Unified Power Flow Controller

(UPFC)

Name of FACT Device	Design Characteristics	Working Of Device	Advantages and Disadvantages
TCSC	Series connected capacitor with thyristor-based controller	Controls the total susceptance of the transmission line using the firing angle of the thyristor	(i) Enhanced real power transfer and better sub-synchronous resonance and oscillation damping.
			(ii) Requires bulky capacitors and reactors
SSSC	Series-connected, utilises voltage source converter with gate turnoff switch	Compensates the transmission line reactance by means of a with gate turnoff switch	(i) Does not need big reactors and capacitors
			(ii) Able to inject actual electricity using a power source that is linked to its DC side.
			(iii) More expensive and difficult than TCSC
SVC	Shunt. Connected with various possible configurations of thyristor-controlled capacitors and reactors	Total Susceptance is controlled by controlling the firing angle This in turn controls the terminal voltage of the connected bus.	(i) Cheaper than STATCOM, with lower losses
			(ii) Slower response due to time delay associated with thyristor. Switching
STATCOM	Shunt connected, employs voltage source converter with pulse width modulation controller	In order to offer reactive power compensation for the linked power system, the voltage source converter transforms a DC voltage into a sinusoidal output voltage with controlled amplitude and phase angle.	(i) is more effective than SCV and has constant current characteristics at low voltages, enabling it to inject or absorb reactive power during low voltage grid conditions.
			(ii) Higher losses and higher cost than SVC of similar ratings.
UPFC	Series-shunt connected, combination of and shunt voltage-source inverters connected via a DC link	Provides active and reactive power flow control by means of the series and shunt converters operating via a common DC link and shunt capacitor storage system.	(i) Combines the advantages of SSSC and STATCOM.
			(ii) Able to inject and absorb both real and reactive Power
			(iii) Higher cost and complexities compared to other FACTS

Table 3 FACT Devices Required Features for their Implementation in MATLAB

V Considered MATLAB Model Analogous to Ratedi Site

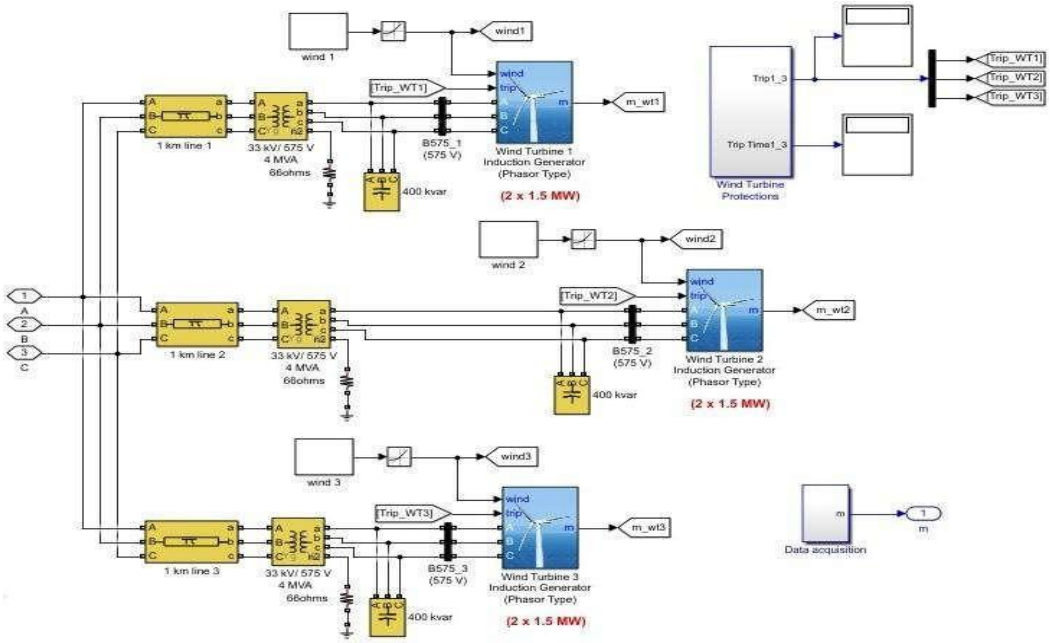

Figure 6 Simulation Model of Wind Turbine System

WindTurbines are working very effectively in wind Power plants. [28]

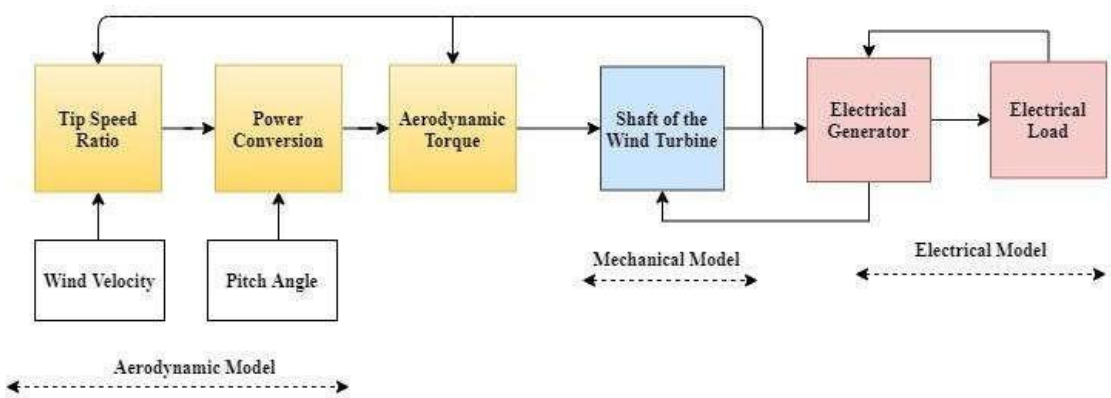

Fig.6.1 Mathematical Model of Wind Turbine

The power obtained from WEG's system is:

$$P = 1/2\ \rho\ V^3$$

$$P_m = 0.5 T_p\ (\lambda, \beta)\ \rho A V_W^3$$

The fig. 6 illustrates the model of WT's System simulated in MATLAB software. In this modelwe have interconnect 6 wind generator each of capacity 1.5 MW. They are connected in the groupof 3 with 2 generators each in each group of capacity 1.5 MW. All these groups form a subsection of 9 MW. All these generators are tie with the grid with the help of transformer. Various data monitoring and safety equipment's relate to them.

5.1 Simulation Model of Considered Site

In this work, a subsection of considered wind power sites located at Ratedi Village, Dewas District, Madhya Pradesh, India is being considered for analyzing the voltage stability. The Simulation model is prepared by using MATLAB software. The capacity of this considered windpower plant is 9 MW, the output of this generator is given to Step-up transformer having a capacity of 47 MVA (33/132 KV) through a transmission line of 25 km and one load is connected. This model is simulated with the help of MATLAB R2021a. The simulation model is indicated in fig. 6.

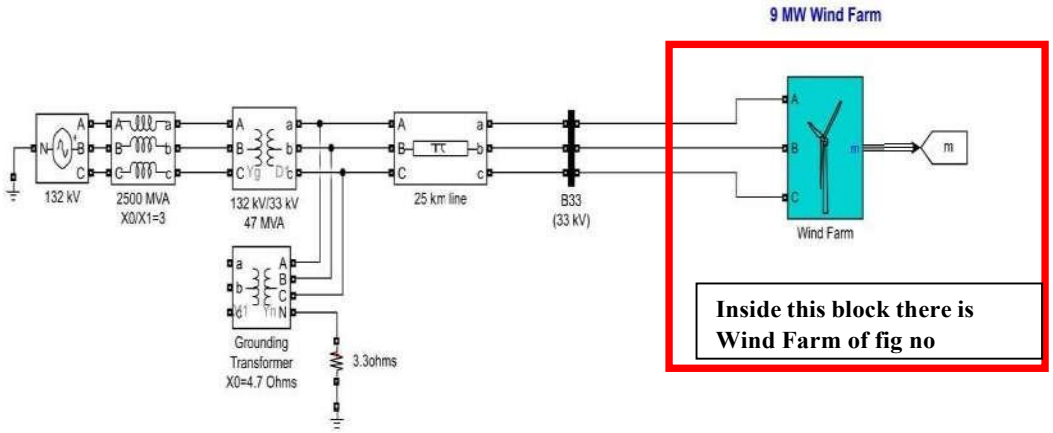

Fig (a)

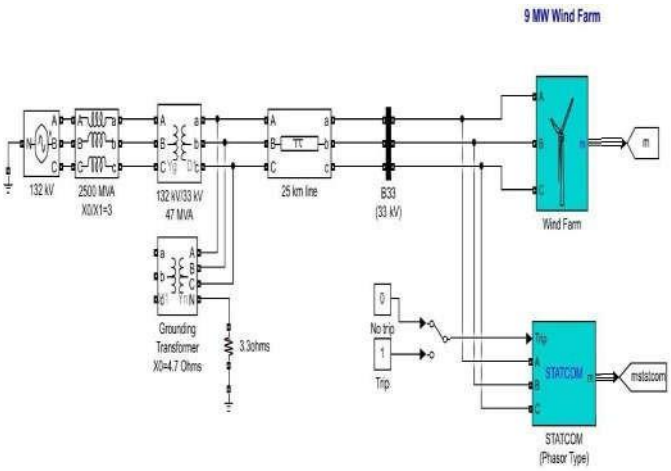

Fig (b)

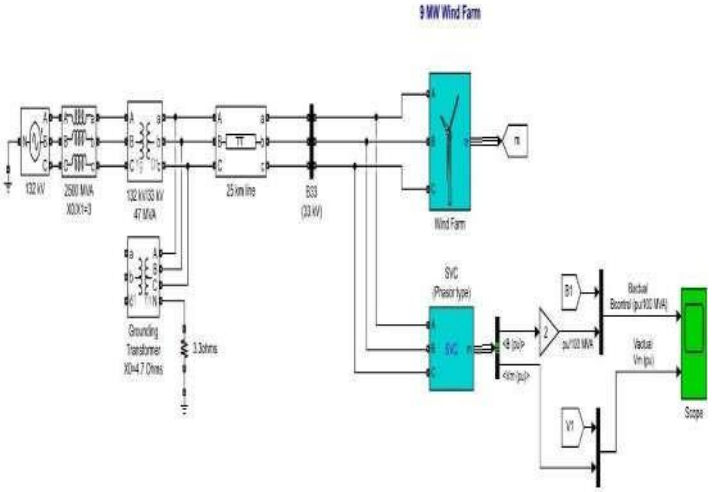

Fig (c)

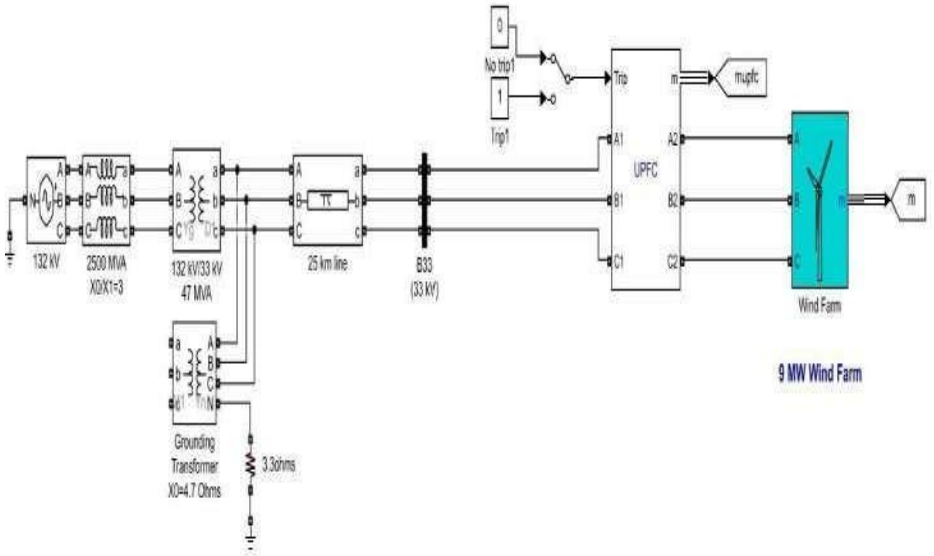

Fig (d)

Fig.7 Grid connected Wind Farm (a) Wind farm with no FACT Device (b) Wind farm with FACT device {STATCOM} (c) (b) Wind farm with FACT device {SVC} (d) (b) Wind farm with FACT device {UPFC}

This paper is made with a pursuance towards the study of the effectsof many facts equipment's for improving the voltage stability of considered subsection of Distributed Generation site i.e., Ratedi Wind Farm. As described in the previous chapter simulation model are prepared for a subsection of Ratedi Wind Power Plant with the aid of MATLAB software. For simulation following circumstances are taken into consideration:

- **Case 1 (Under Normal Operating Condition):** In this case, the System is working normal and not subjected to any kind of disturbance.
- **Case 2 (Under Fault Condition):** Under Fault, Condition To analyze the abnormal operating conditions, after 15 seconds, the simulated system is subjected to a fault, thiscauses a drop in system voltage.
- **Case 3 (With Statcom):** By using suitable FACTS device, we can enhance system voltage level, so, in this case, statcom is connected with the simulated system to enhance voltage value which is reduced due to the fault.
- **Case 4 (With SVC):** In this case, despite Statcom we connect SVC with the simulatedsystem

to enhance the value of voltage which is dropped due to fault.

- **Case 5 (With UPFC):** In this case, UPFC is linked to an increase the level of voltagein the simulated sub section of the considered site.

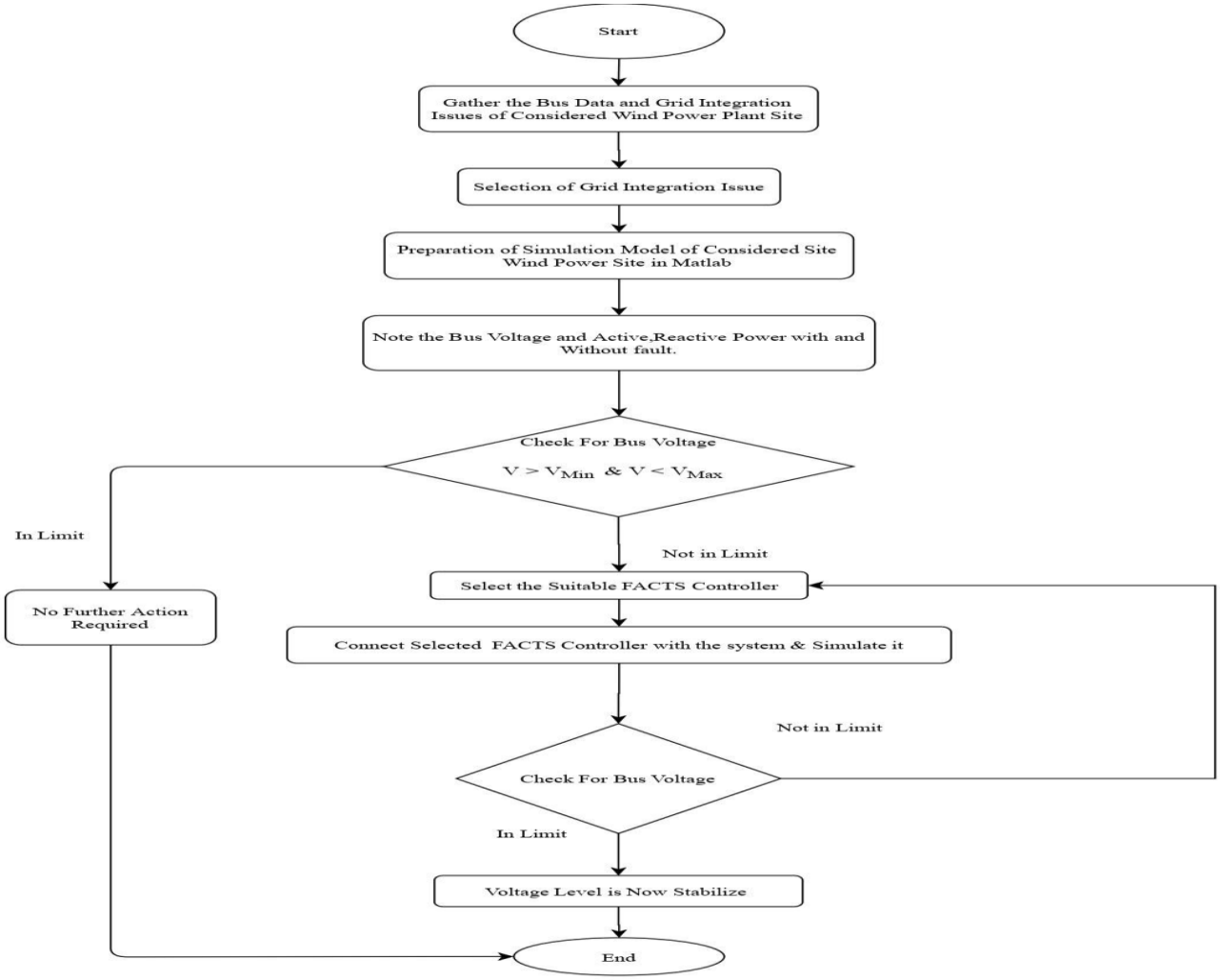

Figure 8: Flow Chart Implemented in MATLAB for all the Above Models While using various FACT Devices.

5.2 Analysis outcomes

The generation of Electrical power with the aid of (RES) renewable energy source in India is increased tremendously. This gives rise to voltage instability problems when this type of generating station is operated in conjunction with the grid. It is mainly observed when this system is joined with a weak grid.

S.No.	State of Sub Section of Considered Site	Value of Bus Voltage (in per Unit)
1	Normal Condition	0.995
2	Under Fault Condition	1.116
3	With Statcom	1.054
4	With SVC	1.127
5	With UPFC	1.497

Table 4 Magnitude of Bus Voltage in Various Operating Modes

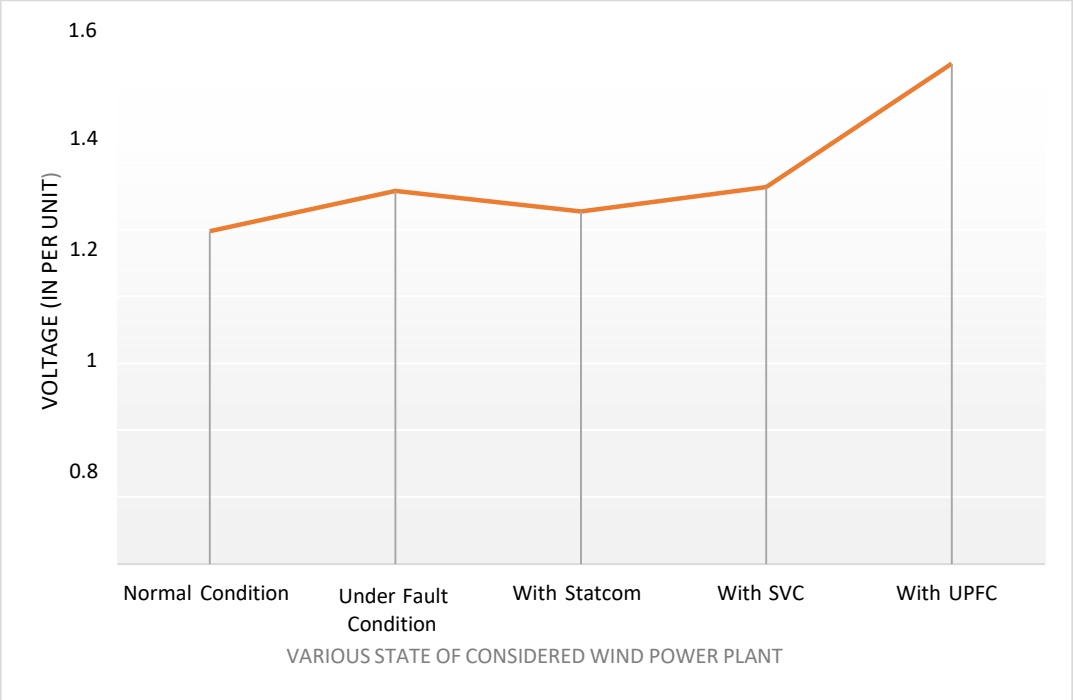

Fig.9 Comparative Analysis between Voltage Values

Voltage at Bus B_{33} under Normal Operating Condition

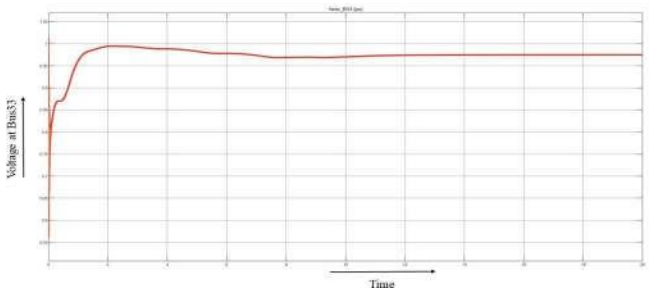

Voltage at Bus 33 under Fault Condition

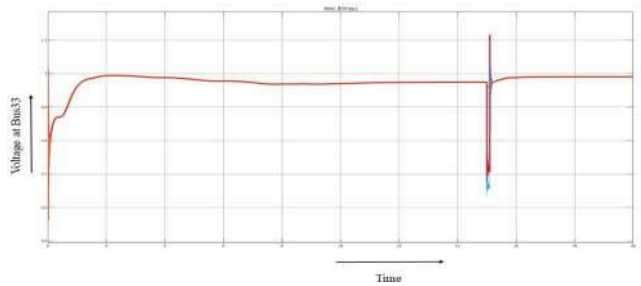

Voltage at Bus B33 after adding STATCOM

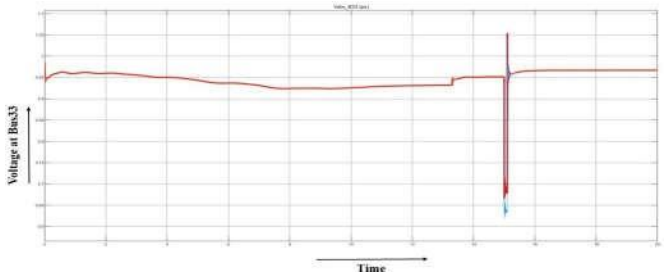

Active Power at Bus B_{33} under Normal State of Operation

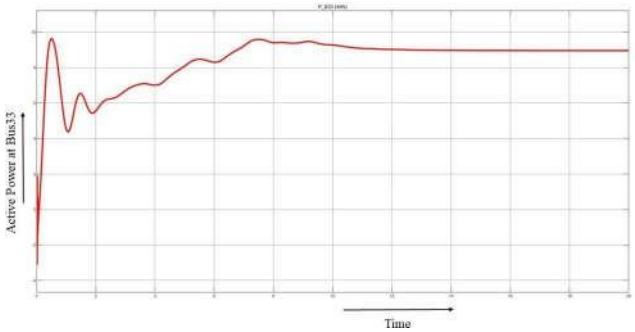

Active Power at B33 under Fault Condition

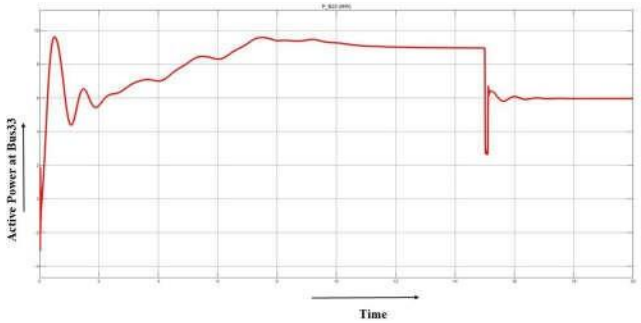

Active Power at Bus B33 after adding STATCOM

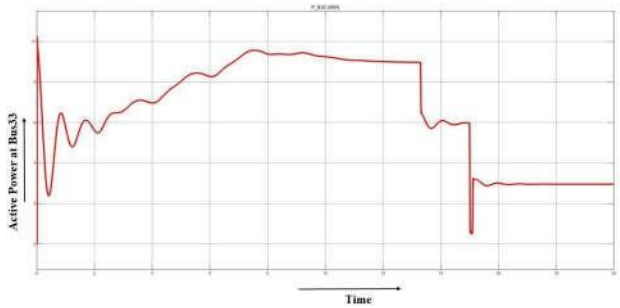

Reactive Power at Bus B_{33} under Normal State of Operation

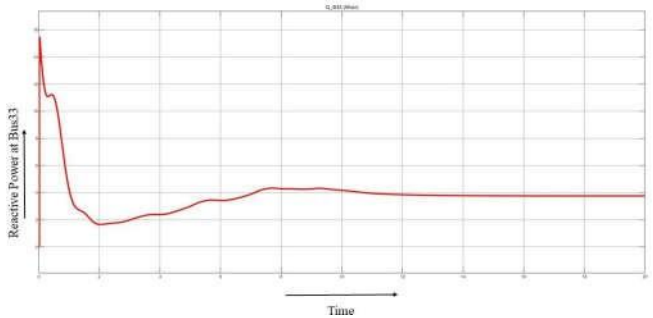

Reactive Power at B_{33} under Fault Condition

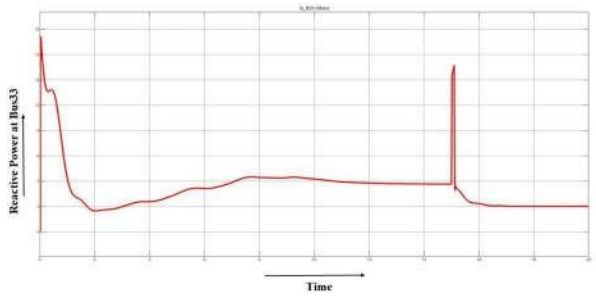

Reactive Power at B_{33} after adding STATCOM

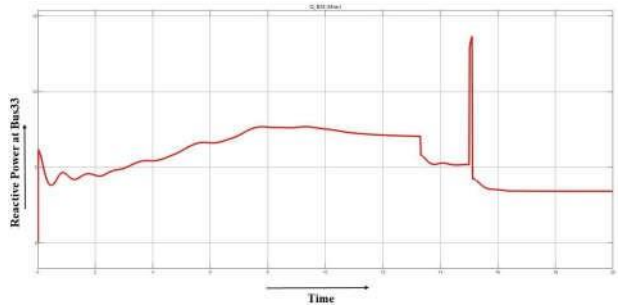

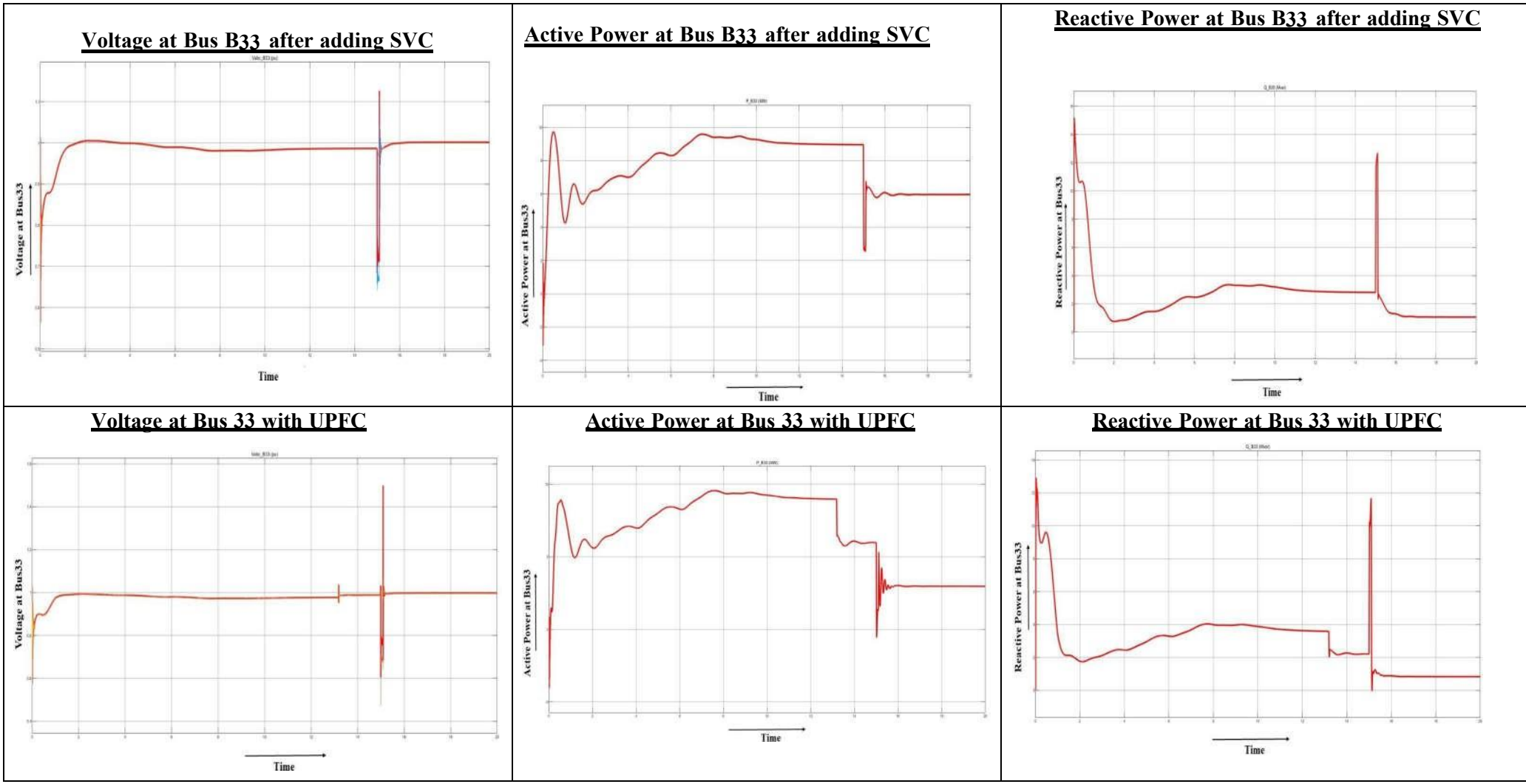

Fig.10 Results obtained after Running the simulation model for all the three FACT devices (i) with STATCOM (ii) With SVC (iii) with UPFC for Examining there Behaviour under Normal and Faulty Conditions [the voltage profile ,Active Power and Reactive Power Compensation is Examined in MATLAB, the fault L-L-G is subjected at 15 seconds and at 15.1 second it was removed so the above results are for that durational behaviour of FACT device for Ratedi Site ,WEC E-31 Convertor wind FARMS]

VI. Conclusion

In today's era the usage of wind power for generation of electricity is used invariably.In comparison with other sources like thermal power plant and Diesel Power plant it is clean and ecofriendly in nature. In India use of renewable energy sources is growing day by day. Wind power is havingexcellent potential in India. Only problem associated with power is having variable attribute ofwind which affects overall generation of power. Now a Days several Wind power projects areoperated in conjunction with the grid. The power generated fromwind power plant is variable and it is requiring an efficient power control for these energy sources. Wind turbines must be able to work ina fault period without disconnecting from the grid.

In this paper an attempt has been made to resolve the problem of voltage stability of concern site. The voltage level of the considered grid-connected wind powersite is being analyzed under various operating conditions with the help of simulations models All simulation work is been carried out in MATLAB Software

This work collaborates, the voltage stability of a subsection of the WEG's system is being examined in different conditions with aid of MATLAB software. The paper also investigates the capability of fact devices like STATCOM, SVC andUPFC for enhancing voltage stability of the wind-based DG system which is working in integration with the grid. The modelling and various control strategies are being discussed.

The results of this research show that STATCOM is very effective inproviding a good regulation of voltage of the system and in controlling Q (reactive power). It raise the reliability of the transmission system and also helpful in stabilizing the system even after the occurrence of the short circuit fault as well. STATCOM is found as the most effectivefact device among all the three devices used in this work for improving the voltage stability ofthe considered site.

References

[1] Sarika D. Patil, "Improvement of Power Quality Considering Voltage Stability in Grid Connected System by FACTS Devices", International Journal of Electrical and Electronics Engineering, Vol-1, Iss-3, 2012, pp. 41-19.

[2] Y. Zhou, D. D. Nguyen, P. C. Kjær and S. Saylors, "Connecting wind power plant with weak grid - Challenges and solutions," 2013 IEEE Power & Energy Society General Meeting, Vancouver, BC, 2013, pp. 1-7.

[3] Praveen Kumar. R And C. Venkatesh Kumar, "Wind Turbine Voltage Stability Using FACTS Device", International Journal of Emerging Technology in Computer Science & Electronics, Volume 8 Issue 1 –APRIL 2014,pp. 104-109.

[4] Mahmoud Ebadian, Ashakn Edrisian, et. al, "Investigating the effect of high level of wind penetration on voltage stability by quasi-static time-domain simulation", International Journal of Renewable Energy Research, Vol.4, No.2, 2014, pp. 355-362.

[5] Jaswinder Singh and Naresh Chand, “Voltage Stability of Wind Power By Using The FACTS Devices”, Chandigarh University Journal of Undergraduate Research and Innovation, Vol. 1 No. 1 2015, pp. 07-10.

[6] L. Badesa, S. Fathima, M. T. Musavi and P. Villeneuve, "Impact of Wind Generation on Dynamic Voltage Stability and Influence of the Point of Interconnection," 2016 IEEE Green Technologies Conference (GreenTech), Kansas City, MO, 2016, pp. 84- 89.

[7] R. Bayindir, S. Demirbas, E. Irmak, U. Cetinkaya, A. Ova and M. Yesil, "Effects of renewable energy sources on the power system," 2016 IEEE International Power Electronics and Motion Control Conference (PEMC), Varna, 2016, pp. 388-393.

[8] Z. D. Wu, P. Dong and Y. C. Chen, "Influence on voltage stability of wind power connected to the grid," 2017 7th International Conference on Power Electronics Systems and Applications - Smart Mobility, Power Transfer & Security (PESA), Hong Kong, 2017, pp. 1-5.

[9] AI-Tameemi, Z.H.,Abuuwaleda et al. “Voltage Stability Enhancement Based on DG units’’, Electrical Engineering, Springer, 2018.

[10] N. K. Rajalwal and P. Mishra, "Impact of DFIG on voltage stability of a network in smart grid: An analysis," 2018 Technologies for Smart-City Energy Security and Power (ICSESP), Bhubaneswar, 2018, pp. 1-9.

[11] Amirreza Gholizadeh,Abbas Rabiee,Roohollah Fadaeinedjad, “A scenario-based voltage stability constrained planning model for integration of large-scale wind farms”, Elsevier, International Journal of Electrical Power & Energy Systems, Volume 105, September 2018, pp 564-580.

[12] S. L. K. and V. K. M., "Dynamic Voltage Stability Enhancement of A Wind Farm Connected To Grid Using Facts- A Comparison," 2018 International Conference on Circuits and Systems in Digital Enterprise Technology (ICCSDET), Kottayam, India, 2018,pp.1-4.

[13] A.B. Almeida, E.V. V.d. Lorenci, R.C. Leme, A.C.Z.D. Souza, B.I.L. Lopes, K. Lo, Probabilistic voltage stability assessment considering renewable sources with the help of the PV and QV curves, IET Renew. Power Gener. 7 (5) (2013) 521–530.

[14] M.A. Kamarposhti, A comparative study of the implementation wind farms integration based on maximization of voltage stability and system loadability, Trakia J. Sci. 14 (3) (2016) 294–304

[15] [26] J. Liu, Y. Xu, Z.Y. Dong, K.P. Wong, Retirement-driven dynamic VAR planning for voltage stability enhancement of power systems with high-level wind power, IEEE Trans. Power Syst. 33 (2) (2018) 2282–2291.

[16] T. Tayyebifar, M. Shaker, M. Aghababaie, Performance comparison of STATCOM versus SVC to improve reactive power control in wind power based DFIG under short circuit fault, in: 2014 Ninth International Conference on Ecological Vehicles and Renewable Energies (EVER), 2014, pp. 1–7.

[17] J.N. da Costa, J.A. Passos Filho, R. Mota Henriques, Loading margin sensitivity analysis in systems with significant wind power generation penetration, Elec. Power Syst. Res. 175 (2019) 105900.

[18] K.Z. Heetun, S.H.E. Abdel Aleem, A.F. Zobaa, Voltage stability analysis of gridconnected wind farms with FACTS: static and dynamic analysis, Energy Pol. Res. 3 (1) (2016) 1–12.

[19] A. Rabiee, S. Nikkhah, A. Soroudi, Information gap decision theory to deal with long-term wind energy planning considering voltage stability, Energy 147 (2018) 451–463.

[20] D.-A. Ciupageanu, G. Lazaroiu, L. Barelli, Wind energy integration: variability analysis and power system impact assessment, Energy 185 (2019) 1183–1196.

[21] M. Jadidbonab, M.J. Vahid-Pakdel, H. Seyedi, B. Mohammadi-ivatloo, Stochastic assessment and enhancement of voltage stability in multi carrier energy systems considering wind power, Int. J. Electr. Power Energy Syst. 106 (2019) 572–584.

[22] H. Rezaie, M.H. Kazemi-Rahbar, enhancing voltage stability and LVRT capability of a wind-integrated power system using a fuzzy-based SVC, Eng. Sci. Technol. Int. J. 22 (3) (2019) 827–839.

[23] M. Darabian, A. Jalilvand, Improving power system stability in the presence of wind farms using STATCOM and predictive control strategy, IET Renew. Power Gener. 12 (1) (2018) 98–111.

[24] A. Rashad, S. Kamel, F. Jurado, Stability improvement of power systems connected with developed wind farms using SSSC controllers, Ain Shams Eng. J. (2017).

[25] M.B. Wafaa, L. Dessaint, Approach to dynamic voltage stability analysis for DFIG wind parks integration, IET Renew. Power Gener. 12 (2) (2018) 190–197

[26] A. Shrivastava, H. K. Singh, P. V. Nandankar, Manoj Kumar Singh, Prateek Nigam, Moti Lal Rinawa "A Smart Grid Energy Management Optimization Technique" J Nucl Ene Sci Power Generat Technol, Volume 10, 2021

[27] S. Khare,A. Kurchania,P. Nigam "Analyze the Performance of Large Scale Rewa Ultra Solar Grid Connected PV System" I. E. Journal, "Industrial Engineering Journal," Concurrent Engineering, vol. 15, no. 11, pp. 395–406, 2004.

[28] B. Chandra Saha, A. Shrivastava, S. Kumar Jain, P. Nigam, and S. Hemavathi, "On-Grid solar microgrid temperature monitoring and assessment in real time," Mater Today Proc, vol. 62, no. xxxx, pp. 5013–5020, 2022, doi: 10.1016/j.matpr.2022.04.896.

[29] P. Nigam, P. K. Sharma, R. K. Gupta, S. Hemavathi , and D. M. Alsekait, "Intelligent Trust Based Electrical Vehicles Using 6G," J Pharm Negat Results, vol. 13, no. 9, pp. 583–591, 2022, doi: 10.47750/pnr.2022.13.s09.064.

[30] A. Marthanda and H. S. Sugumar, "Journal of Nuclear Energy Science & Power Generation Technology Electric Power Grid Modernization and Energy Management Roadmap," no. December, pp. 6–10, 2021.

[31] K. Thakre, K. B. Mohanty, V. S. Kommukuri, A. Chatterjee, P. Nigam, and S. K. Gupta, "Modified cascaded multilevel inverter for renewable energy systems with less number of unidirectional switches," Energy Reports, vol. 8, pp. 5296–5304, 2022, doi: 10.1016/j.egyr.2022.03.167.

[32] Sheikh, S. A., Kumar, A., & Jain, S. (2021). Voltage stability enhancement of grid-connected wind farm using hybrid D-STATCOM. Electrical Engineering, 1-16.

[33] Nallagonda, V. K., & Chandorkar, M. C. (2021). A novel voltage control strategy for a hybrid wind energy conversion system with STATCOM. Electric Power Components and Systems, 49(17), 1888-1901.

[34] Li, J., Zhu, L., Yang, Y., & He, J. (2021). Voltage stability enhancement of wind farm based on hybrid SVC-STATCOM and optimal power flow. IEEE Transactions on Sustainable Energy, 12(2), 862-872.

[35] Guo, M., Jia, H., Wang, C., & Wen, J. (2021). Voltage stability enhancement of grid-connected wind farms using a hybrid UPFC. International Journal of Electrical Power & Energy Systems, 129, 107438.

[36] Fahmy, M., & Hamed, M. (2022). Voltage stability improvement of wind farm based on hybrid UPQC-STATCOM. Electric Power Components and Systems, 50(1), 68-84.

[37] Dogramaci, E., & Dursun, E. (2022). Power quality enhancement and voltage stability improvement of a wave energy converter system with a hybrid D-STATCOM. International Journal of Energy Research, 46(5), 5497-5510.