Power Quality Improvement in DG System using Shunt Active Filter

P.Sridher[1], T. Santosh Kumar[2], V.Vijaya Bhaskar[3]

[1,2,3] *(Assistant Professor, Department of EEE, Holy Mary Institute of Technology & Sciences, Hyd, India)*

Abstract : *Injection of power generated by the wind turbine system into an electric grid mainly effects the power quality. The performance of this wind turbine and its power quality is determined on the basis of its measurement of power ratings as per IEEE standards. The influence of the wind turbine in the grid system concerning the power quality measurements are the active power, reactive power, variation of voltage, flicker, harmonics, and electrical behavior of switching operation. To mitigate the power quality problems this paper proposes the shunt compensator techniques. Here, the proposed system is verified experimentally using both STATCOM and TSC compensators. This control schemes for grid connected wind energy system is simulated using Matlab/Simulink.*

Keywords - *: Static Compensator, Thyristor Switched Capacitor, Wind Energy System, Grid interconnection, power quality.*

I. INTRODUCTION

With expansion in the interest for Electricity because of expansion in populace and industrialization, the Generation of power was truly a test now a day. In the event that we need to expand the power produced in the customary path [1]-[2] i.e., by method for non-renewable vitality sources like coal, diesel, normal gasses and comparative fossil energizes, the contamination builds which debases the Environment and human way of life. The reasons for power quality issues are by and large mind boggling and hard to identify when we coordinate a wind turbine to the network. Therefore, the power electronic based forced commutated converters are preferred in distribution systems for maintainece of system stability, reliability and quality of power as the point of common coupling.

A shunt device is a compensating device i.e. which is connected between the grid connected point called as PCC and the ground [3]. Shunt device either can absorb or generate the reactive power for controlling the magnitude of voltage at point of common coupling.

The reactive power compensation is also one of the application of shunt converter devices [4]. Figure 1 shows the basic diagram for the shunt connected inverter based grid connected system.

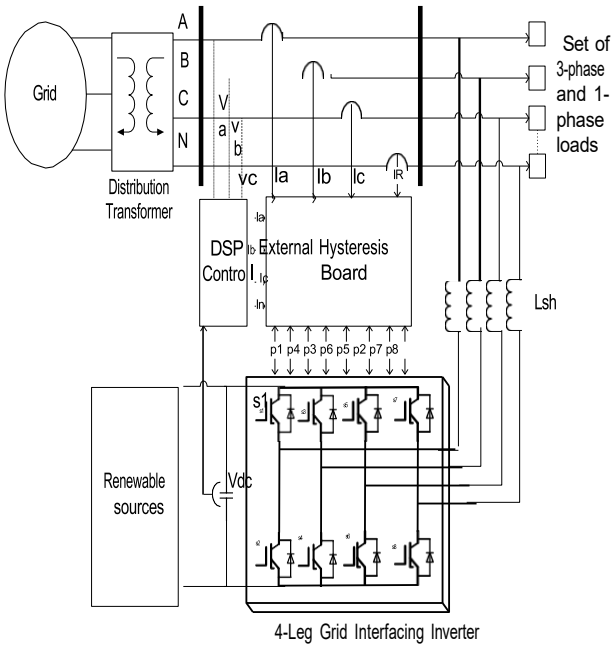

Figure 1: Diagram for Proposed System.

Grid Interconnection of Wind Energy System

Recently, grid connected wind system have been spreading in residential areas and in industrial areas. So we have to find a suitable Maximum Power Point Technique (MPPT) technique that gives a better power output. For a grid connected system, there are certain factors that have been considered such that DC-AC conversion with highest output power quality with the proper design of filters. Grid interface inverters transfer the energy from the wind energy generation system to the grid by maintaining constancy of dc link voltage. For a grid connected system the utility network mainly demands for better power quality and power output. In the case of voltage fluctuations, control of grid parameters is rather difficult [5]. So for a wind system that is connected to a grid, the first stage is the boosting stage and the second stage is DC-AC converter [6]. An output filter is usually employed which reduces the ripple components due to switching. The problem associated with the grid connected system is that the dc link voltage that oscillates between the two levels depends on the operating climatic conditions (ambient temperature & irradiance) in which inverter that acts as a power controller between the dc link and the utility isolated. Dc link is generally used to isolate the grid from the inverter side so that we can control both wind system and grid separately. All the available power that can be extracted from the wind system is transferred to the grid [6].

Wind Energy System

The generation of electrical power is obtained mainly in two ways. One is conventional source and other is non- conventional energy sources. The generation of electricity using non-renewable resources such as coal, natural gas, oil and so on, shows great impact on the environment by production of green house gases. Hence, by considering all these conditions the generation of electricity is obtained from the renewable energy sources.

Basically, out of all renewable energy sources the wind turbine plays an important role for generating electricity. And from economical point of view the wind turbine has low maintainece cost and it needs no fuel,

so, it is pollution free. In the world scenario, 50-60 percent [7] of energy is generated from wind turbine as compared with all other renewable energy sources.

Figure 2 shows the basic configuration diagram of the wind energy system.

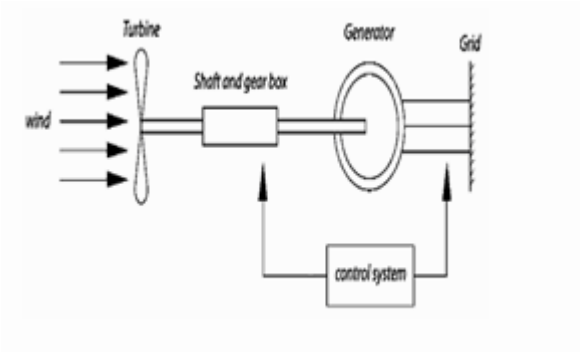

Figure 2 Basic schematic diagram of wind turbine

The wind turbine converters wind energy to electrical energy and the generator mechanical shaft power is obtained by the following expression:

$$P_m = 0.5\rho A v^3 C_p$$

Where (kg/m) is the air density and A (m) is the area swept out by turbine blade, V_{wind} is the wind speed in mtr/s. It is not possible to extract all kinetic energy of wind, thus it extract a fraction of power in wind, there *Cp* is the power coefficient, depends on type and operating condition of wind turbine.

And the coefficient of power also plays a key role for wind system and the basic minimum value of power coefficient is 0.5 [8]. The power coefficient is obtained by the ratio of tip speed ratio to pitch angle. The pitch angle is the angle at which the blades of turbine are arranged based on their longitude axis and changes in wind direction. The tip speed ration is defined as ratio of linear speed of the rotor to the wind speed.

Figure 3 shows a typical waveform for coefficient of power with respect to the tip speed ratio (TSR). The maximum achievable range of TSR is from 0.4 to 0.5 for turbine with high speed and from 0.2 t0 0.4 for turbine with low speed [9].

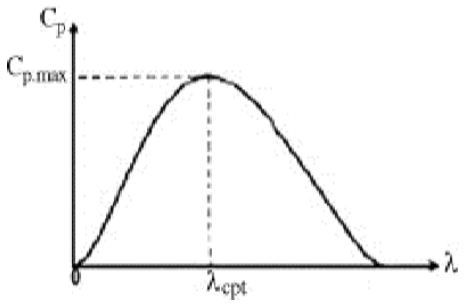

Figure 3: Power coefficient Vs Tip Speed Ratio

DFIG on Wind Generator

The doubly-fed induction has special advantages as energy converter a wind generator for the following reasons; these make DFIG a preferred electro-mechanical device and wind generators[10].

1. DFIG has the ability active or reactive powers independently through the rotor excitation currents.
2. The DFIG need not necessarily be excited from the main grid. It can be magnetized from the circuit too.

3. It is capable of generating reactive power that can be delivered to the stator bythe grid side converter.

4. The size of the converter is not related to the converted power; it is related to the selected speed range and hence so the slip power.

5. In case of weak-grids, where the voltage may fluctuate, the DFIG may be ordered to produce or absorb an amount of reactive power from the grid with purpose of voltage control.

The paper presented here addresses this problem. When the weak systems, with large voltage fluctuations, do not exchange adequate reactive power, the system is to be supplemented with shunt compensating devices, like TSC or STATCOM.

II. STATCOM AND ITS CONTROL TECHNIQUE

A STATCOM is a one of the compensated device which is obtained from the FACTS family [11] and is a combination of power electronic converter along with reactor. Mostly, the converter is constructed by the use of fully controlled devices such as GTO, IGBT or MOSFET. The main purpose of this STATCOM converter control technique is used to compensate the deviations in power system for improving power quality. In this paper grid interfaced wind turbine based STATCOM control scheme is proposed for improving the reliability of electrical power [12].

• The Dc voltage obtained for STATCOM is generated from Solar Cells. The schematic diagram of Static compensator is given in figure 4.

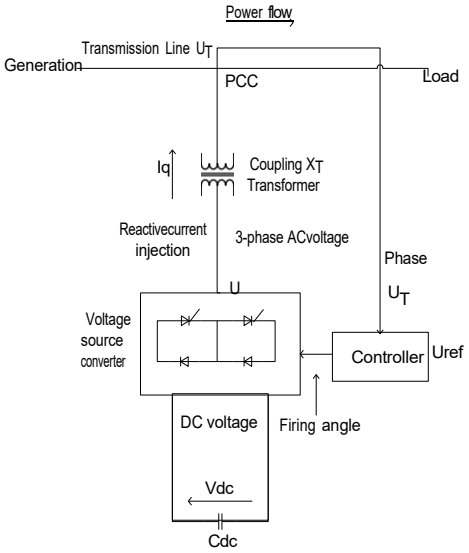

Figure 4: Basic block diagram for static compensator.

The utilization of different types of electrical loads in three phase system, produces an unbalances in current, which causes the unreliable power [13].

Thereby for maintaining the electrical reliability the statcom controller plays a key role. In this statcom control technique, the reference voltage and dc link capacitor voltages are compared and the result obtained from this is converted to two phase coordinators called as orthogonal vectors.

2.1 THYRISTOR SWITCHED CAPACITOR

The major and most important component of the family of static var compensator [14] is Thyristor Switched Capacitor. It is an equipment which is used for reactive power compensation in power systems. It is a

combination of capacitor bank which is connected in series with the anti-parallel thyristor valve and a small current limiting inductor.

The thyristor switched capacitor is commonly a three phase system which is connected in either star or delta. As compared with thyristor controlled reactor, the thyristor switched capacitor produces less harmonics demanding no extra filter circuits. Due to this reason the thyristor switched capacitor is mostly used in static var compensator family and used for only reactive power [15]. The basic schematic diagram for thyristor switched capacitor (TSC) is as shown in figure 5.

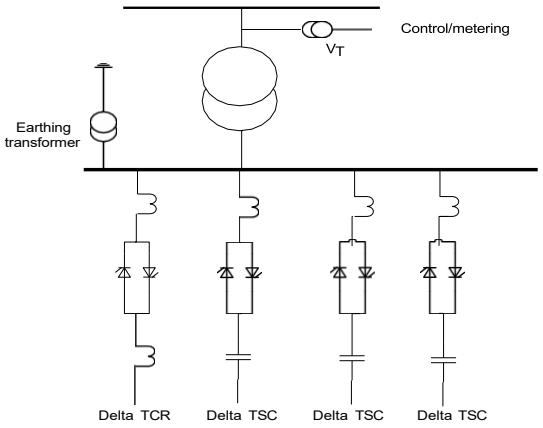

Figure 5: Thyristor Switched Capacitor

III. SIMULATION STUDY

Case 1: *Simulation result with use of TSC Converter*

The simulation is done based on the figure 1.

The simulation diagram for the proposed grid interfaced wind energy system with Thyristor switched capacitor is shown in figure 6.

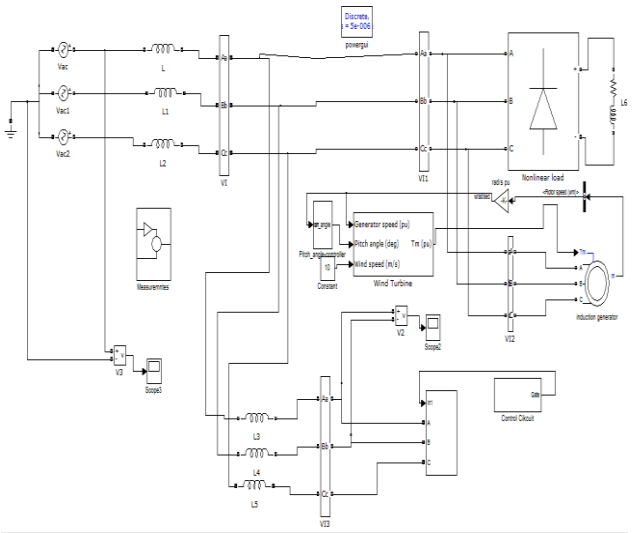

Figure 6: Simulation Diagram of proposed system with TSC

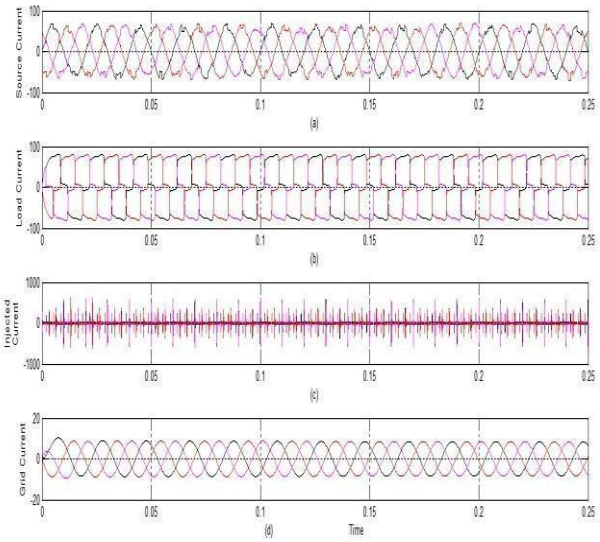

Figure 7: Results for Wind Energy System with TSC

In figure 7 the wave form (a) shows the output for source current after compensation, (b) waveform for load current, (c) waveform for the injected current by the tsc converter and finally the waveform (d) shows the result for current from wind turbine. And figure 8 shows its total harmonic distortion waveform.

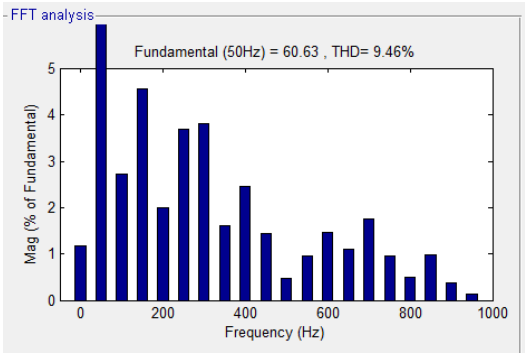

Figure 8: FFT analysis for Source current.

Case 2: *Simulation Diagram and results with STATCOM*

The simulation diagram for the proposed grid interfaced wind energy system with STATCOM controller is shown in figure 9.

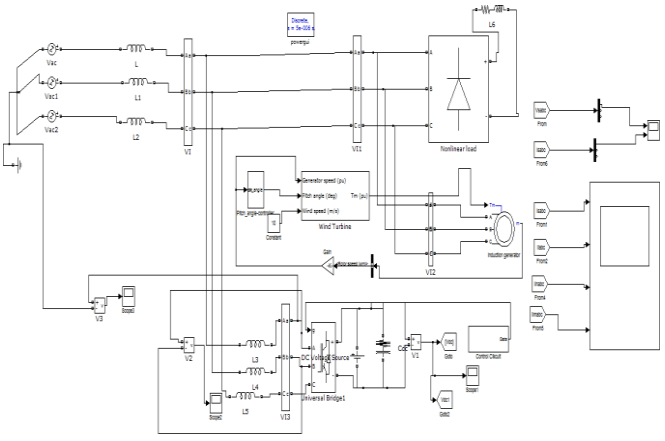

Figure 9: Over All Circuit Diagram in Simulation with Sub Systems

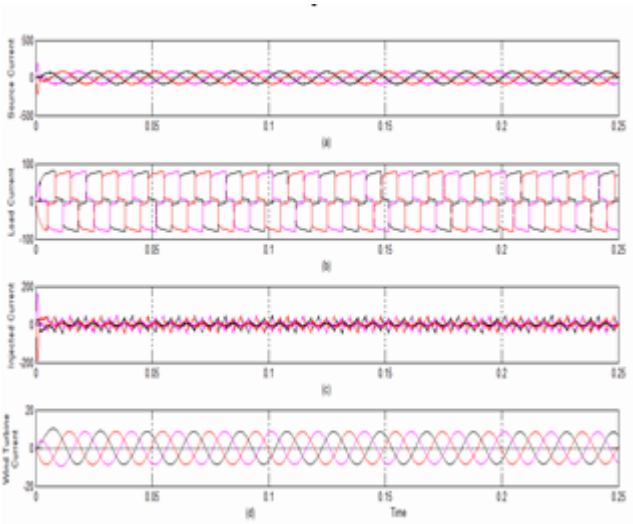

Figure 10: simulation result for current.

In figure 10 the wave form (a) shows the output for source current after compensation, (b) waveform for load current, (c) waveform for the injected current by the Statcom converter and finally the waveform (d) shows the result for current from wind turbine. Figure 11 shows the total harmonic distortion of proposed system with Statcom controller.

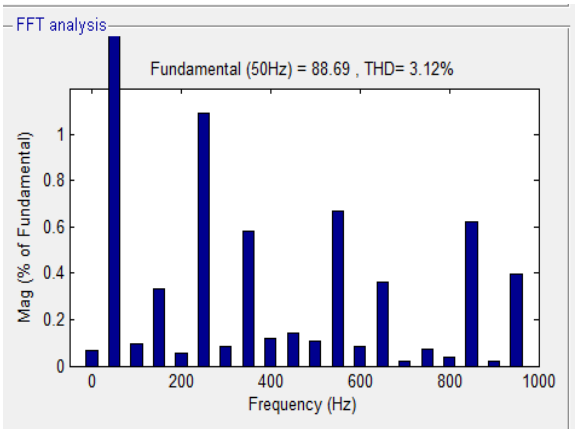

Fig 11: FFT analysis for Source current.

From these results, examined the performance of TSC and STATCOM in electric power systems. Based on the analytical and simulation studies, the impact of TSC and STATCOM on the studied power system is presented. It was shown that both devices significantly improve the transient voltage behavior of power systems. And finally all these factors will increase the reliability of wind power plants. So it seems inevitable to use TSC or STATCOM in power plants. Our studies show that STATCOM have faster response in compensation and correction of voltage profile than TSC. But since our purpose is mainly to prevent system instability in power systems so with regardless of the cost and higher casualties of STATCOM we can prefer STATCOM over TSC.

IV. CONCLUSION

The paper presents a novel concept of integration of STATCOM/TSC with grid inter faced wind energy system for power quality improvement. The paper also presents effects of power quality on consumer and power utility systems. The shunt devices proposed here, while reducing the distortions in currents, improved the power factor thus reducing the reducing the reactive power demand from the wind generator and the load at point of common coupling. Thus, the integration of FACTS devices maintains the desired power quality requirements. The operation of STATCOM and the TSC and their control strategies are simulated in MATLAB/SIMULINK. The use of STATCOM, as a shunt controller, gives better results than by TSC.

REFERENCE

[1] A.Q.Huang, M Baran, S.Bhattacharya ―STATCOM importance on the integration of a large wind farm into a weak loop power system,‖ IEEE Trans. Energy Conv., vol. 23, no. 1, pp. 226–232, Mar. 2008.

[2] Hook, Y. Liu, presents a paper on ―Mitigation of the wind generation integration related power quality problems by energy storage,‖ at EPQU J., vol. XII, no. 2, in 2006.

[3] Wind Turbine Generating System—Part 21, International standard-IEC 61400-21, 2001.

[4] J.Manel, ―Power electronic system for grid integration of renewable energy source: A survey,‖ IEEE Trans. Ind. Electron., vol. 53, no. 4, pp. 1002–1014, 2006, Carrasco

[5] S. Ezhilarasan, P. Palanivel, S. Sambath ―Design and Development of Energy Management System for DG Source Allocation in a Micro Grid with Energy Storage System‖ Volume 8, Issue 13, July 2015.

[6] S.Heier, Grid Integration of Wind Energy Conversions. Hoboken, NJ: Wiley, 2007, pp. 256–259.

[7] J.J.Gutierrez, J.Ruiz, L.Leturiondo, and A.Lazkano, ―Flicker measurement system for wind turbine certification,‖ IEEE Trans. Instrum. Meas., vol. 58, no. 2, pp. 375–382, Feb. 2009.

BIBLIOGRAPHY OF AUTHORS

	P.Sridher received the B.Tech. Degree in Electrical and Electronics Engineering from JNTU-Hyderabad, Andhra Pradesh, India in the year 2012,and M.Tech from JNTU Hyderabad, Andhra Pradesh, India in the year 2015.He has teaching experience of three years in various engineering colleges. He is currently working as Assistant Professor in Holy Mary Institute of Technology and Science, Bogaram (V) R.R.Dist, Hyderabad, Andhra Pradesh, India He has published 2 research papers in reputed National and International Journals and Attended International and National Conferences, attended workshops in the Dept.of Electrical and Electronics Engineering. His interest areas Power Electronics& Drives, FACTS, etc.
	.Santosh Kumar received the B.Tech. degree in Electrical and Electronics Engineering from JNTU-Hyderabad, Andhra Pradesh, India in the year 2011, and M.Tech from JNTU Hyderabad, Andhra Pradesh, India in the year 2014. He has teaching experience of Three years in various engineering colleges. He is currently working as Assistant Professor in Holy Mary Institute of Technology and Science, Bogaram (V), R.R. Dist., Hyderabad, Andhra Pradesh, India in the Dept. of Electrical & Electronics Engineering. He has published 14 research papers in reputed National, International Journals and various Conferences. His interest areas are Power Electronics, FACTS etc.
	V.Vijaya Bhaskar completed his M.Tech in the year of 2013 from JNTU Hyderabad. Completed B.Tech from JNTU Hyderabad in 2011. He has 4 years of experience in teaching field. Presently working as Assistant Professor in Holy Mary Institute of Technology & Sciences, Bogaram, R.R.District, Hyderabad, Telangana, India. He has published 12 research papers in reputed National and International Journals and Attended International and National Conferences, attended 10 workshops. His areas of interest are Power Systems, Power Electronics & Drives, FACTS, etc.